ORGANIC SYNTHESES

AN ANNUAL PUBLICATION OF SATISFACTORY METHODS FOR THE PREPARATION *OF ORGANIC CHEMICALS*

AGRICULTURAL RESEARCH INSTITUTE COIMBATORE
No. 166
16 JAN 1928

EDITORIAL BOARD

HENRY GILMAN, *Editor-in-Chief*

ROGER ADAMS J. B. CONANT

H. T. CLARKE C. S. MARVEL

FRANK C. WHITMORE

CONTRIBUTORS

HOMER ADKINS, University of Wisconsin.
C. F. H. ALLEN, Tufts College, Massachusetts.
G. D. BEAL, University of Illinois.
L. A. BIGELOW, Brown University, Rhode Island.
M. BOURGUEL, University of Bordeaux, France.
B. B. CORSON, Middlebury College, Vermont.
F. B. DAINS, University of Kansas.
E. E. DREGER, Colgate and Co., New Jersey.
G. MALCOLM DYSON, Oxford, England.
P. R. HAESELER, Pennsylvania State College.
B. HELFERICH, The University, Greifswald, Germany.
A. F. HOLLEMAN, University of Amsterdam, Holland.
J. K. H. INGLIS, University of Otago, New Zealand.
J. R. JOHNSON, University of Illinois.
JOSEPH KENYON, Battersea Polytechnic, London.
EDWARD KREMERS, University of Wisconsin.
R. LESPIEAU, École Normale Supérieure, Paris.
F. MAUTHNER, The University, Budapest, Hungary.
F. K. THAYER, Abbott Laboratories, Chicago.
A. S. WHEELER, University of North Carolina.
T. S. WHEELER, Research Dep't, Royal Arsenal, Woolwich, England.
W. C. WILSON, Miner Laboratories, Chicago.
F. G. WILLSON, Research Dep't, Royal Arsenal, *Woolwich, England.*

VOL. VI

NEW YORK
JOHN WILEY & SONS, INC.
LONDON: CHAPMAN & HALL, LIMITED

ORGANIC SYNTHESES

THESE VOLUMES NOW READY

Volume I.

ROGER ADAMS, University of Illinois, Editor-in-Chief. vi + 84 pages, 6 by 9; 7 figures. Cloth, $1.50 *net.*

Volume II.

JAMES BRYANT CONANT, Harvard University, Editor-in-Chief. vii+100 pages, 6 by 9; 3 figures. Cloth, $1.50 *net.*

Volume III.

HANS THACHER CLARKE, Eastman Kodak Company, Editor-in-Chief. v+105 pages, 6 by 9; 3 figures. Cloth, $1.50 *net.*

Volume IV.

OLIVER KAMM, Parke, Davis, and Company, Editor-in-Chief. v+89 pages, 6 by 9; 3 figures. Cloth, $1.50 *net.*

Volume V.

CARL SHIPP MARVEL, University of Illinois, Editor-in-Chief. v+110 pages, 6 by 9; 3 figures. Cloth, $1.50 *net.*

Volume VI

HENRY GILMAN, Iowa State College, Editor-in-Chief. v+120 pages; 6 by 9; 5 figures. Cloth. $1.50 *net.*

Copyright, 1926
By ROGER ADAMS

Printed in U. S. A.

PRESS OF
BRAUNWORTH & CO., INC.
BOOK MANUFACTURERS
BROOKLYN, NEW YORK

PREFACE TO VOLUME VI

THE general plan of this series as set forth in preceding volumes has been followed in the present volume. It is a great pleasure to acknowledge the cordial response of former and new contributors, particularly those in other countries. In this volume twenty-seven of the thirty preparations have been submitted by twenty-three contributors, ten of whom are of foreign countries.

In continuance of the policy of including improved directions for preparations published in previous volumes, a new set of directions is given for the preparation of benzil.

Several new features are inaugurated in the present volume. To the cumulative subject index to the six volumes which have already appeared, a similar author index is now added. In order to bring literature references to methods of preparative value up to date, there has been included an appendix which contains later references to directions published previously in this series. The appendix also contains corrections to some of the earlier preparations. The editors acknowledge their appreciation of the assistance rendered by those who submitted corrections and suggestions, and welcome heartily any comments calculated to improve the series.

The editors regret that pressure of other work has made it impossible for Dr. Oliver Kamm to continue his valuable services with this series.

TABLE OF CONTENTS

		PAGE
I.	Acrolein	1
II.	Benzil	6
III.	3-Bromo-4-aminotoluene	8
IV.	2-Bromoethanol	12
V.	*m*-Bromotoluene	16
VI.	*p*-Chlorophenyl Isothiocyanate	18
VII.	3-Cyclohexyl-2-bromopropene-1	20
VIII.	Cyclohexylcarbinol	22
IX.	3-Cyclohexylpropine-1	26
X.	Diacetonamine Hydrogen Oxalate	28
XI.	α, α-Diphenylethylene	32
XII.	Ethyl Acetoacetate	36
XIII.	Ethyl Acetopyruvate	40
XIV.	2-Furancarboxylic Acid and 2-Furylcarbinol	44
XV.	α-Glyceryl Phenyl Ether	48
XVI.	*n*-Heptyl Alcohol	52
XVII.	*n*-Hexyl Alcohol	54
XVIII.	Mandelic Acid	58
XIX.	α-Methyl-*d*-glucoside	64
XX.	Myristic Acid	66
XXI.	*d*- and *l*-Octanol-2	68
XXII.	Phenyl Isothiocyanate	72
XXIII.	4-Phenylsemicarbazide	74
XXIV.	Quinizarin	78
XXV.	*dl*-Tartaric Acid	82
XXVI.	Thiophosgene	86
XXVII.	Thymoquinone	92
XXVIII.	Trimethylgallic Acid	96
XXIX.	Trimyristin	100
	Additions and Corrections for Preceding Volumes	103
	Later References to Preparations in Preceding Volumes	105
	Author Index	109
	Subject Index	113

ORGANIC SYNTHESES

I

ACROLEIN

$$CH_2OHCHOHCH_2OH \rightarrow CH_2{=}CHCHO + H_2O$$

Submitted by HOMER ADKINS and W. H. HARTUNG.
Checked by FRANK C. WHITMORE and M. L. WOLFROM.

1. Procedure

THE apparatus is assembled according to Fig. 1. *B* and *D* are 5-l. round-bottom flasks, immersed to about two-thirds of

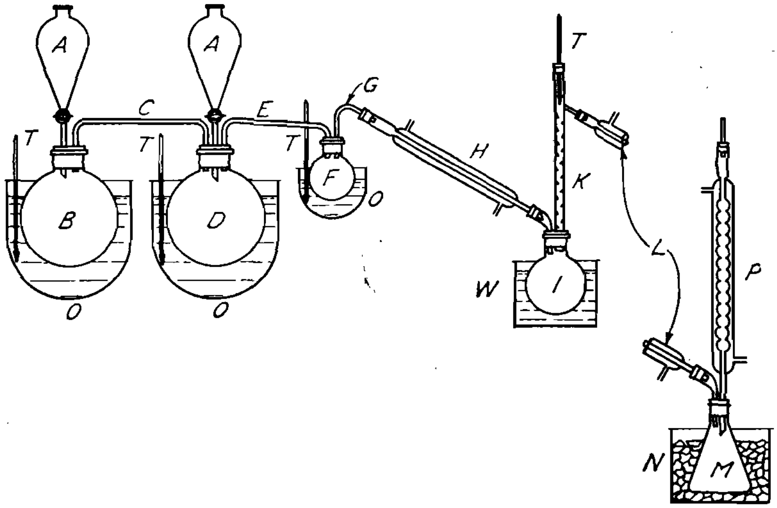

FIG. 1.

their height in deep oil baths heated by large burners. Each bath is provided with a thermometer reaching to the level of the bottom of the flask. Flask *B* is fitted with a specially treated

two-hole cork stopper (Note 1), in one hole of which is fitted a 500-cc. separatory funnel *A* and in the other a delivery tube *C* of 12-mm. diameter. The tubes must not extend more than 3 mm. below the stopper. Flask *D* is fitted with a three-hole cork stopper connected with a separatory funnel, the delivery tube from *B*, and the delivery tube *E* of 12-mm. tubing leading to flask *F*. *F* is a 500-cc. round-bottom flask immersed to two-thirds of its height in an oil bath heated by a Bunsen burner and provided with a thermometer.

Flask *F* is provided with a two-hole cork stopper connected with tube *E*, and with tube *G* which connects with the first condenser *H* and may be of smaller bore than tubes *C* and *E*. *H* is a condenser with a 30-cm. water jacket. *H* is connected with *I* by means of an adapter. *I* is a 1-l. round-bottom flask supported in a pan which is at first filled with ice and later used as a water bath. Flask *I* is fitted with a two-hole cork stopper carrying the adapter connected with condenser *H* and a Vigreux column *K* of 2-cm. diameter and a length of 30 cm. to the side arm. Flask *I* and condenser *H* are covered with black cloth (Note 2). The side arm of *K* is connected with a 90-cm. water-jacketed condenser *L* which leads into *M* through an adapter. *M* is a 750-cc. Erlenmeyer flask immersed in an ice bath. Flask *M* is provided with a two-hole stopper connected with the adapter from *L* and an upright bulb condenser that is provided with a tube leading through a window or to a hood.

Before the final assembling of the apparatus, the flasks are charged as follows: One kilo of freshly fused and finely powdered acid potassium sulfate, 200 g. of powdered potassium sulfate, and 300 g. of dry glycerol (Note 3) are thoroughly mixed in each of flasks *B* and *D*. In each of flasks *I* and *M* is placed about 1 g. of hydroquinone to act as a stabilizer for the acrolein (Moureu, *Compt. rend.*, **170**, 26 (1920)).

The apparatus is assembled as indicated and the oil baths under *B* and *D* are heated to about 190–200° (Note 4), and the oil bath under *F* to about 110–120°. The bath under *I* is filled with ice. The volatile products are collected in *I* which is kept carefully protected from light. After the first violent reaction has

abated (about one hour) the baths under *B* and *D* are raised to 215–230° and maintained there until no more volatile product comes over (a total time of heating of about four and one-half hours). When the reaction is well started 300 g. of dry glycerol is placed in each separatory funnel, and added drop by drop during the heating. After *B* and *D* have been heated about four hours the ice under *I* is replaced by water which is heated to 75–80° to distil the acrolein into flask *M*, which is packed in ice. Near the end of the distillation the water under *I* is heated to boiling.

The product in *M* is treated with small amounts of solid sodium bicarbonate to neutralize any acid present. The cold liquid is filtered through a small filter into a 1500-cc. distilling flask containing about 1 g. of hydroquinone. It is then distilled into a tared dark bottle containing about 1 g. of hydroquinone. The yield of product boiling at 52.5–55.5° (Note 5) obtained from 1200 g. (13 moles) of dry glycerol is 240–350 g. (33–48 per cent of the theoretical amount).

2. Notes

1. The corks used in the apparatus are made tight and heat-resistant by treatment with sodium silicate solution. After being properly fitted and bored they are placed in the silicate solution contained in a bottle that is connected with a suction pump. The solution is forced into the pores of the corks by alternately making and breaking the vacuum and shaking the solution vigorously. After the excess of solution has been wiped off, the corks are put in place while still wet. After this the outside of each cork is given an extra coat of the silicate solution. When corks treated in this way were used no odor of acrolein was noted in the laboratory.

2. The exclusion of light slows up the polymerization of the acrolein. If the condensers are not protected from light a solid polymer collects in them.

3. The glycerol is dehydrated by heating slowly in an an open dish in a hood until the temperature of the liquid is 170°. A

sand bath is used and the heating requires about three hours. "Dynamite glycerine," 96–98 per cent, may be used instead of the dried glycerol.

4. The heating must not be too rapid nor too high at first as there is danger of frothing followed by a clogging of the apparatus.

5. Pure acrolein boils at 52.5°/760 mm. (Moureu, Boutaric and Dufraisse, *J. chim. phys.* **18,** 333 (1921)).

3. Other Methods of Preparation

Satisfactory methods for the preparation of acrolein have been described by Wohl and Mylo,[1] Witzemann,[2] and Moureu.[3] In the Wohl and Mylo method the vapors of glycerol are passed over magnesium sulfate maintained at 330–340.° Witzemann's method involves the use of magnesium sulfate at elevated temperatures with the consequent danger of breaking the generating flasks. Moureu's method involves apparatus not always available.

[1] Ber. **45,** 2046 (1912).
[2] J. Am. Chem. Soc. **36,** 1766 (1914).
[3] Compt. rend. **169,** 805 (1919). Ann. chim. (9), **15,** 176 (1921).

II

BENZIL

$$C_6H_5CHOHCOC_6H_5 + (O) \rightarrow C_6H_5COCOC_6H_5 + H_2O$$

Submitted by H. T. Clarke and E. E. Dreger.
Checked by Roger Adams and Gerald H. Coleman.

1. Procedure

In a 12-l. flask, fitted with a mechanical stirrer and mercury seal, reflux condenser and an inlet tube for the introduction of air, is placed a mixture of 4100 g. (16.4 moles) (Note 1) of crystalline copper sulfate (Note 2), 4000 g. of technical pyridine and 1600 g. of water. This is heated on a steam bath with stirring until the copper sulfate is completely dissolved and then 1696 g. (8 moles) of benzoin (Org. Syn. **1**, 33; uncrystallized material is satisfactory) is added and heating and stirring continued for two hours. The reaction mixture becomes dark green in color and the melted benzil forms the upper layer. After cooling, the copper sulfate-pyridine solution is decanted and the benzil washed with water and then heated with 3–4 l. of 10 per cent hydrochloric acid. After cooling, the benzil is filtered, washed with water, dried and recrystallized from carbon tetrachloride (2 l. of solvent per kg. of benzil). By concentration of the mother liquors a certain amount of benzil is always obtained. The total yield is 1450 g. (86 per cent of the theoretical amount) of recrystallized material melting at 94–95° (Note 3).

The copper sulfate-pyridine mixture is readily reoxidized by passing a current of air through it for thirty-six hours (Note 4). To this resulting solution is now added 200 g. of pyridine and it is then used for oxidizing another batch of 1696 g. of benzoin.

2. Notes

1. In checking this preparation, runs about 25 per cent of the size described were made. The yields were about 3 per cent less

than in the larger runs. For the reoxidization of the smaller amount of copper sulfate-pyridine solution, air was passed through for fifteen hours.

2. Copper hydroxide (or carbonate) does not dissolve in pyridine.

3. In comparing the copper sulfate-pyridine method with the nitric acid method (Org. Syn. **1**, 25) it should be pointed out that the constants on the samples are as follows:

Method	m. p. crude	m. p. recryst.	Fehling's Test on recryst.
Copper sulfate-pyridine	94–95°	94–95°	Negative
Nitric acid	88°	93–94°	Positive

In other words, by the nitric acid oxidation it is difficult to obtain a product completely free from benzoin. The yields by the nitric acid method are generally about 95–96 per cent, whereas with the copper sulfate-pyridine method the yield drops to approximately 86 per cent.

4. Fifteen hours was found not long enough to effect a complete oxidation.

3. Other Methods of Preparation

These are discussed in Org. Syn. **1**, 26. The foregoing method is based on the observation of E. Fischer[1] that benzoin reduces Fehling's solution in the cold. Pyridine was selected as it prevents the precipitation of cuprous oxide, is not so volatile as ammonia, and acts as a partial solvent for the benzoin.

Mohler[2] has just shown that copper, pyridine and air oxidize benzoin to benzoic acid. Also, the same oxidation takes place in the absence of copper.

The melting temperatures of mixtures of benzil and benzoin have been recorded by Vanstone,[3] who showed that the maximum possible depression is about 10°.

[1] Ann. **211**, 214 (footnote) (1882).

[2] Helvetica Chim. Acta, **8**, 740 (1925).

[3] J. Chem. Soc. **95**, 600 (1909).

III

3-BROMO-4-AMINOTOLUENE

$$p\text{-}CH_3C_6H_4NH_2 + CH_3CO_2H \rightarrow p\text{-}CH_3C_6H_4NHCOCH_3 + H_2O$$

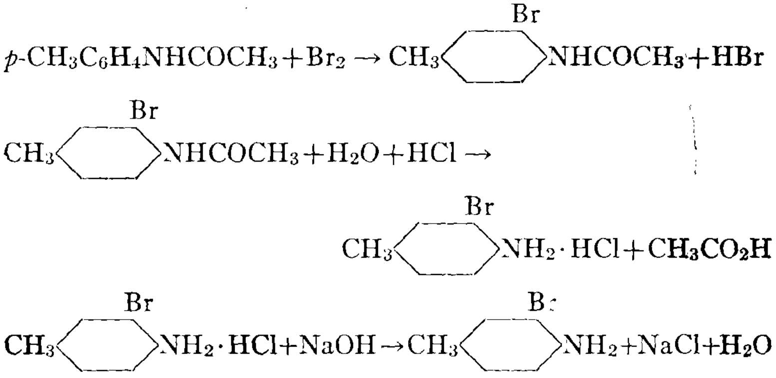

Submitted by J. R. Johnson and L. T. Sandborn.
Checked by Frank C. Whitmore and A. M. Griswold.

1. Procedure

p-Acetotoluide is prepared by refluxing 214 g. (2 moles) of commercial *p*-toluidine with 800 cc. of glacial acetic acid in a 2-l. round-bottom flask for two hours. The reflux condenser is replaced by a mechanical stirrer and the mixture is stirred and cooled to 45°. Part of the product may separate in small crystalline flakes. The mixture is thoroughly stirred and 325 g. (2.03 moles) of bromine (106 cc.) is added slowly from a separatory funnel at such a rate that the temperature of the mixture is maintained at 50–55°. During the course of this addition, which requires about forty minutes, a precipitate may separate; this later dissolves. The mixture is stirred half an hour after the

bromine has been added, and is then poured in a thin stream (Note 1) with efficient stirring into 10 l. of cold water to which has been added 25 g. of sodium bisulfite (Note 2).

The 3-bromo-4-acetaminotoluene separates in crystalline flocks. It is filtered by suction and washed well with water and pressed dry. The wet crude material is dried until its weight does not exceed 500 g. before proceeding with the hydrolysis (Note 3).

The partially dried 3-bromo-4-acetaminotoluene is refluxed with 500 cc. of 95 per cent ethyl alcohol in a 3-l. round-bottom flask. To the boiling solution is added 500 cc. of concentrated hydrochloric acid and the refluxing is continued for three hours. During this time, crystals of the hydrochloride of 3-bromo-4-aminotoluene separate. The hot mixture is poured into a 2-l. beaker and cooled thoroughly in running water. The hydrochloride is filtered by suction and washed rapidly with two 100-cc. portions of chilled alcohol. The weight of the hydrochloride is 250–300 g. (Note 4).

The hydrochloride is suspended in 800 cc. of water in a 2-l. beaker provided with a mechanical stirrer. The base is liberated by the addition of a solution of 140 g. of technical sodium hydroxide in 700 cc. of water, and settles as a heavy brownish oil. After cooling to room temperature, the oil is separated and weighed. The yield of the crude base is 225–250 g. (60–67 per cent of the theoretical amount based on the amount of toluidine used). The crude material may be used directly for the preparation of *m*-bromotoluene (p. 16).

The base may be purified by steam distillation but distillation under reduced pressure is more satisfactory. The oil is dried over 5 g. of solid sodium hydroxide and distilled in vacuo. The first portion of the distillate may contain *p*-toluidine and must be carefully separated, as it causes rapid discoloration. The 3-bromo-4-aminotoluene is obtained as a colorless liquid of b.p. 120–122°/30 mm. or 92–94°/3 mm. It solidifies on cooling and melts at 16–18°. The loss on purification is about 15 per cent of the weight of the crude base.

2. Notes

1. The first of the bromine compound often separates as a heavy oil. To avoid the formation of lumps, this material should be seeded or allowed to crystallize spontaneously before the main portion is poured into water.

2. If the color of bromine persists, more sodium bisulfite should be added.

3. If the material is not partly dried before hydrolysis, the yield of the hydrochloride is diminished because of its solubility. If pure 3-bromo-4-acetaminotoluene is desired, the crude material may be crystallized from 50 per cent alcohol with the addition of decolorizing carbon (Norite) as almost colorless needles, m.p. 116–117°. The yield is 360 g. (79 per cent of the theoretical amount). This purification has no advantage when the acetamino compound is to be hydrolyzed to the amine.

4. The dark filtrate from the hydrochloride does not contain enough dissolved salt to justify recovery unless the acetamino compound was insufficiently dried before the hydrolysis.

3. Other Methods of Preparation

The bromination of *p*-acetotoluide, followed by hydrolysis of the resulting bromoacetotoluide[1] is the only practical method which has been used for making 3-bromo-4-aminotoluene. The present process is a modification of the method described by Feitler.[2]

[1] Ann. **168**, 153 (1873).
[2] Z. physik. Chem. **4**, 77 (1889).

IV

2-BROMOETHANOL

(Ethylene Bromohydrin)

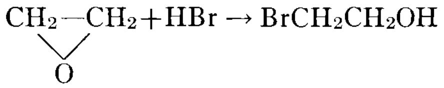

Submitted by F. K. THAYER, C. S. MARVEL and G. S. HIERS.
Checked by HENRY GILMAN and F. SCHULZE.

1. Procedure

IN the 1-l. three-necked flask *A* (Fig. 2) is placed 550 cc. (4.25 moles) of 46 per cent hydrobromic acid (sp. g. 1.46) (Note 1). Ethylene oxide (Note 2) is led into the acid solution as indicated in the diagram. The tank *E* is arranged on a balance so that the amount of ethylene oxide which is used can be weighed. *B* is a U-tube containing water to indicate the rate of flow of the gas. *D* is a glass coil surrounded by ice and salt which cools the gas nearly to the liquefaction temperature. *C* is another U-tube containing water which shows whether or not the gas is being completely absorbed.

The flask *A* is surrounded by an ice-salt bath and the stirrer is started. When the temperature of the acid has dropped to 10°, 132 g. (3 moles) of ethylene oxide is added over a period of about two and one-half hours (Note 3). The stirring is continued for one hour (Note 4) after all of the ethylene oxide has been added and the temperature is maintained below 10° during the reaction.

After this time the excess hydrobromic acid is neutralized with excess sodium carbonate, of which about 100 g. of anhydrous salt is required. To the aqueous solution is then added about 100 g. of anhydrous sodium sulfate until some of the solid does

not dissolve. A layer of ethylene bromohydrin separates and is collected in 200 cc. of ether. The ether layer is below the aqueous layer. The solid sodium sulfate is filtered from the solution and washed once or twice with a small amount of ether (Note 5) to remove any mechanically held bromohydrin. The aqueous filtrate is twice extracted with 200-cc. portions of ether (Note 6). The combined ether extracts are dried over night with anhydrous sodium sulfate, filtered and distilled from a steam bath (Note 7). The remaining bromohydrin is distilled under reduced pressure

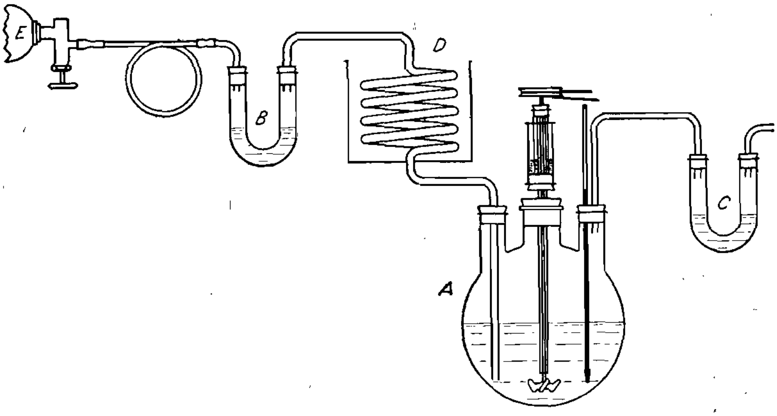

FIG. 2.

(Note 8). After two distillations the fraction boiling at 55–59°/22 mm. (Note 9) is pure ethylene bromohydrin. The yield is 327–345 g. (87–92 per cent of the theoretical amount).

2. Notes

1. An equivalent amount of hydrobromic acid of greater strength may be used. Acid of lower concentration gives a much lower yield. The preparation of 48 per cent hydrobromic acid is described in Org. Syn. **1**, 2.

2. Ethylene oxide attacks rubber very rapidly. Hence if rubber is used to connect the glass tubes which conduct the gas to the reaction flask, care must be taken to have the glass tubes meet inside the rubber tubing.

3. The ethylene oxide must be added quite rapidly in order to complete the addition in the time specified. It should be added at a maximum possible rate consistent with practically no loss of ethylene oxide through tube *C*. The best absorption of ethylene oxide appears to take place when the temperature is kept between 0° and 10°. Absorption cannot be completed in two and one-half hours when the temperature is kept at 0°.

4. When the mixture is stirred too long or the temperature is allowed to rise much above 10° the yields are lower.

5. The ether used to wash the sodium sulfate crystals may be used for the extraction of the aqueous solution.

6. When the bromohydrin is removed by the first treatment with ether, the ethereal layer is on the bottom. Subsequent ethereal extractions float on the aqueous layer.

7. About 300–335 cc. (50–55 per cent) of ether is recovered.

8. A modified Claisen flask (Org. Syn. **1**, 40) was used to fractionate the compound. Distillation under atmospheric pressure causes some decomposition (Read and Williams, *J. Chem. Soc.* **117**, 1216 (1920)).

9. In the first distillation the fraction boiling at 50–65°/22 mm. is collected. Boiling points observed at other pressures are as follows: 47–51°/15 mm.; 59–63°/25 mm.; and 90–94°/80 mm.

3. Other Methods of Preparation

Ethylene bromohydrin has been prepared by the reaction between ethylene glycol and hydrobromic acid[1] and phosphorus tribromide.[2] It has also been prepared by the direct addition of hypobromous acid to ethylene,[3] and by the reaction between ethylene and dilute bromine water.[4] With ethylene oxide now available at a reasonable price, the method described is probably the best because of the high yields and the convenience of reaction.

[1] Jahresber. **1872**, 304; J. Am. Chem. Soc. **38**, 1079 (1916); Acad. Sci. Fennicae. **3A**, 1-103 (C. A. **1920**, 2176).

[2] Ber. **9**, 48 (1876).

[3] J. Russ. Phys. Chem. Soc. **30**, 900 (1898) (Chem. Zentr. **1899**, II, 591).

[4] J. Chem. Soc. **111**, 241 (1917); **117**, 1214 (1920); **129**, 499 (1926).

V

m-BROMOTOLUENE

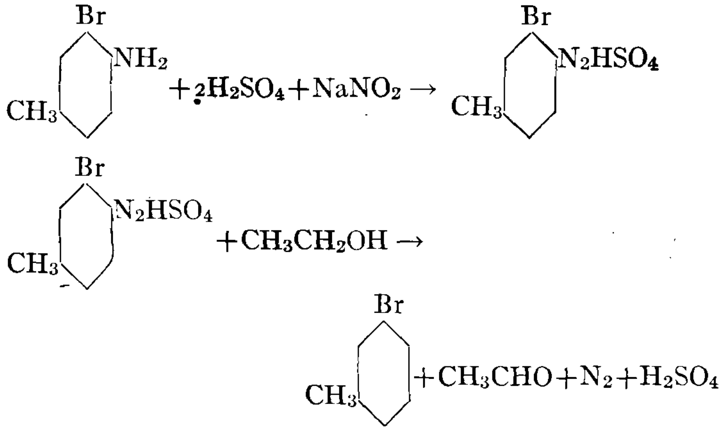

Submitted by L. A. Bigelow, J. R. Johnson and L. T. Sandborn.
Checked by Frank C. Whitmore and A. M. Griswold.

1. Procedure

To a cold mixture of 800 cc. of 95 per cent ethyl alcohol and 200 cc. of concentrated sulfuric acid (Note 1) in a 5-l. round-bottom flask, provided with an efficient mechanical stirrer, is added 250 g. (1.33 moles) of crude 3-bromo-4-aminotoluene (p. 8). The solution is stirred and cooled to 10° and a solution of 148 g. (2.05 moles) of U.S.P. sodium nitrite in 260 cc. of water is added from a separatory funnel. During this addition, the temperature of the mixture must not be allowed to rise above 10°. After all of the nitrite solution has been added, the mixture is stirred twenty minutes longer to complete the diazotization.

To the diazotized solution is added 35 g. (0.55 mole) of copper bronze (Note 2) which has been washed with ether. The stirrer is replaced by a long, efficient reflux condenser. A bath of ice water is prepared for cooling the flask when the reaction becomes

too vigorous. The flask is warmed cautiously until a vigorous evolution of gas starts. It is then immersed in the ice water to prevent loss through the condenser by too rapid evolution of nitrogen and acetaldehyde. When the reaction has moderated, the flask is again warmed, and finally the mixture is heated for ten minutes on a steam bath. At the end of the reaction the color changes from reddish brown to yellow.

After the addition of 2 l. of water, the mixture is steam-distilled as long as any oil comes over. The crude, heavy, yellow oil is separated and washed with two 200-cc. portions of 10 per cent sodium hydroxide, once with 100 cc. of water, twice with 150-cc. portions of concentrated sulfuric acid, and finally with 100 cc. of 5 per cent. sodium carbonate solution. It is dried with about 5 g. of calcium chloride, filtered through glass wool, and distilled using a long air condenser. Most of the product boils at 180–183°/750 mm. The yield of pure colorless material, b.p. 183°/760 mm., is 125–135 g. (36–39 per cent of the theoretical amount, based on the amount of *p*-toluidine originally used, or 54–59 per cent based on the amount of 3-bromo-4-aminotoluene).

2. Notes

1. Proper care must be exercised in mixing the alcohol and sulfuric acid. The mixture is best cooled in the flask with stirring.

2. Reduced copper powder and various grades of copper bronze were used with practically the same results.

3. Other Methods of Preparation

m-Bromotoluene has been prepared by the diazotization of *m*-toluidine followed by treatment with cuprous bromide, potassium bromide and hydrobromic acid.[1] It has also been obtained by elimination of the amino group from 3-bromo-4-aminotoluene[2,3] and 5-bromo-2-aminotoluene.[4] The present process is a modification of the method of Feitler.[3]

[1] Ber. **37**, 994 (1904).
[2] Ann. **168**, 155, 158 (1873).
[3] Z. physik. Chem. **4**, 77 (1889).
[4] Ann. **168**, 164 (1873).

VI

p-CHLOROPHENYL ISOTHIOCYANATE

$$p\text{-}ClC_6H_4NH_2 + CSCl_2 \rightarrow p\text{-}ClC_6H_4NCS + 2HCl$$

Submitted by G. MALCOLM DYSON.
Checked by FRANK C. WHITMORE and P. L. CRAMER.

1. Procedure

IN a 5-l. crock or battery jar, provided with a powerful mechanical stirrer, are placed 3.5 l. of water and 249 g. (2.16 moles) of thiophosgene (p. 86) (Note 1). To the vigorously stirred (Note 2) mixture is added slowly 255 g. (2 moles) of *p*-chloroaniline during about one-half hour. The stirring is continued for about an additional half-hour. The dark brown oil is separated, washed with 50 cc. of 10 per cent hydrochloric acid, and placed in a flask for steam distillation.

The flask is immersed in an oil bath heated to 120° and dry steam is then passed through the reaction mixture. The first few cubic centimeters of distillate contain the excess of thiophosgene and are discarded. The isothiocyanate passes over with the water as an oil that solidifies on cooling. The steam distillation requires about four hours. The crude material is crystallized from two parts of ethyl alcohol at 50°, from which it separates as white needles melting at 44–45°. The yield is 245–275 g. (72–81 per cent of the theoretical amount) (Note 3).

2. Notes

1. Because of the objectionable properties of thiophosgene, care should be exercised in its use.

2. The stirring at the start must be very vigorous or the yield is decreased.

3. The method is general for alkyl- and halogen-substituted aromatic amines.

3. Other Methods of Preparation

p-Chlorophenyl isothiocyanate has also been prepared by treating an alcoholic solution of *sym*-di-*p*-chlorophenyl thiourea with iodine,[1] from ammonium *p*-chlorophenyldithiocarbamate and lead nitrate,[2] (p. 72), and from the action of thiophosgene with *p*-chloroaniline.[3]

[1] Ber. **5**, 156 (1872).
[2] Univ. Kansas Sci. Bull. **13**, 1 (1922).
[3] J. Chem. Soc. **125**, 1702 (1924).

VII

3-CYCLOHEXYL-2-BROMOPROPENE-1

$$C_6H_{11}MgBr + CH_2BrCBr{=}CH_2 \rightarrow C_6H_{11}CH_2CBr{=}CH_2 + MgBr_2$$

Submitted by R. Lespieau and M. Bourguel.
Checked by Roger Adams and M. M. Brubaker.

1. Procedure

A 3-l. three-necked, round-bottom flask is fitted with a mechanical stirrer through a mercury seal, a reflux condenser and a 1-l. separatory funnel. A mixture of 200 g. (1 mole) of 2,3-dibromopropene (Org. Syn. **5**, 49) and 200 cc. of dry ether is added. The flask is now cooled in an ice bath, the stirrer is started, and one molecular equivalent of cyclohexylmagnesium bromide, prepared from 31 g. of magnesium, 204 g. of cyclohexyl bromide and 400 cc. of dry ether (Note 1) is added at such a rate that the mixture refluxes gently (Note 2). The addition takes about one-half to three-quarters of an hour. Two layers are formed and magnesium bromide may or may not separate.

The stirring should be continued and the ice bath replaced by a hot-water bath, and the mixture refluxed gently for two hours. The flask is again cooled and 30 cc. of concentrated hydrochloric acid in 350 cc. of water is added through the separatory funnel. This should be added slowly as long as heat is evolved. The contents of the flask are then transferred to a separatory funnel, the ether layer separated and dried over calcium chloride.

The ether is distilled on a steam bath (Note 3) and the residue fractionated under reduced pressure by means of a 20-cm. column (Org. Syn. **1**, 40). After three fractionations, there is obtained 32–44 g. of a product boiling up to 100°/25 mm., which is mainly unchanged dibromopropene (b.p. 42–43°/18 mm.), and

123–130 g. (60.5–64 per cent of the theoretical amount, not taking into account recovered dibromopropene) of cyclohexylbromopropene (Note 4) boiling at 100–105°/25 mm. This material is satisfactory for most purposes. On redistillation it boils at 88–89°/14 mm.

2. Notes

1. The preparation of cyclohexylmagnesium bromide is described on p. 22. The solution may be standardized by titrating against 0.5 N hydrochloric acid, and exactly one mole equivalent is used in the preparation. Five cubic centimeters of cyclohexylmagnesium bromide solution is slowly added to 20 cc. of water, an excess of the standard acid is added, and the excess acid titrated with sodium hydroxide. If 85 g. (3.5 moles) of magnesium, one liter of dry ether, and 571 g. of cyclohexyl bromide (3.5 moles) are used, a solution results which is about 2 molar.

Excess of Grignard reagent may be employed and the same yield obtained, so that the titration is an aid to conserving Grignard reagent. About an 80 per cent yield of cyclohexylmagnesium bromide from cyclohexyl bromide and magnesium can generally be depended upon.

2. The reaction is instantaneous and is not stopped by moderate cooling. The cooling may be dispensed with and the cyclohexylmagnesium bromide added more slowly (two hours).

3. The ether solution may be added in several portions to a 500-cc. modified Claisen flask (Org. Syn. **1**, 40) and the ether distilled after each addition.

4. By a similar procedure benzylmagnesium chloride and 2,3-dibromopropene give 4-phenyl-2-bromobutene-1 in about 45 per cent yield, b.p. 119°/20 mm.; and heptylmagnesium bromide and 2,3-dibromopropene give 2-bromodecene-1 in 60–65 per cent yields, b.p. 76–77°/3 mm.

3. Other Methods of Preparation

3-Cyclohexyl-2-bromopropene-1 has been made by the action of cyclohexylmagnesium bromide on 2,3-dibromopropene.[1]

[1] Bull. soc. chim. (4) **29**, 528 (1921)

VIII

CYCLOHEXYLCARBINOL

$$C_6H_{11}Br + Mg \rightarrow C_6H_{11}MgBr$$

$$C_6H_{11}MgBr + HCHO \rightarrow C_6H_{11}CH_2OMgBr$$

$$C_6H_{11}CH_2OMgBr + H_2O \rightarrow C_6H_{11}CH_2OH + Mg(OH)Br$$

Submitted by ROGER ADAMS and C. R. NOLLER.
Checked by HENRY GILMAN and J. E. KIRBY.

1. Procedure

IN a 1-l. three-necked, round-bottom flask fitted with a mechanical stirrer through a mercury seal, a separatory funnel and an efficient reflux condenser to which a calcium chloride tube is attached, are placed 25 g. (1.03 moles) of magnesium turnings, 140 cc. of dry ether, and a small crystal of iodine. The stirrer is started and a small portion (about 10 cc.) of a solution of 118.5 g. (1 mole) of cyclohexyl bromide (Note 1) in 120 cc. of dry ether is added through the separatory funnel. After the reaction starts, the remainder of the solution is run in at such a rate that the whole is added at the end of forty-five minutes. The mixture is stirred and refluxed for an additional thirty to forty-five minutes.

The separatory funnel is now replaced by a wide glass tube (about 12 mm. internal diameter) which passes well into the flask but does not dip below the surface of the liquid (Note 2). This tube connects directly with a 500-cc. round-bottom flask containing 50 g. of paraformaldehyde which has been previously dried for two days in a vacuum desiccator over phosphorus pentoxide. The stirrer is started (Note 3) and the flask containing the paraformaldehyde is heated in an oil bath to 180–200°,

when depolymerization takes place and gaseous formaldehyde (Notes 4 and 5) passes into the Grignard reagent. At the end of about two and one-half hours most of the paraformaldehyde has been depolymerized and the reaction is complete (Note 6).

The reaction mixture is then transferred to a 2-l. round-bottom flask with wide neck, and to this is added all at once 300 g. of cracked ice, and the mixture is rapidly agitated by a rotary motion until the decomposition is complete (Note 7). Sufficient 30 per cent sulfuric acid is added to dissolve the magnesium hydroxide, and the mixture is then steam-distilled until oil no longer collects on the surface of the distillate. The distillate, which amounts to 1500–2500 cc., is saturated with

ERRATUM

Volume 6, page 22, line 6 now reads

"is started and a small portion (about 10 cc.) of a solution of 118.5"

It should read

"is started and a small portion (about 10 cc.) of a solution of 163"

2. Notes

1. If the cyclohexyl bromide contains traces of alcohol the yield is considerably reduced. The alcohol may be removed by washing with cold concentrated sulfuric acid, then with water, and finally drying and distilling.

2. Since a considerable amount of formaldehyde repolymerizes on the walls of the side tube, a wide tube is used to prevent clogging. Clogging by deposition of the reaction product is reduced by having the entry tube about 1 cm. above the surface of the solution.

3. Vigorous stirring is desirable as it materially affects the rate of absorption of the gaseous formaldehyde.

4. The amount of paraformaldehyde used is considerably in excess of one mole since it is difficult to tell when the reaction is complete because of repolymerization. For larger runs, the amount of paraformaldehyde need not be increased in direct proportion, as the 20-g. excess used here is sufficient to insure complete reaction in a run of almost any size. An excess of formaldehyde apparently does not decrease the yield.

5. If paraformaldehyde is used directly without depolymerization, the yield is only 40–45 per cent.

6. At the end of about one and one-half hours tests are made at fifteen-minute intervals for the presence of Grignard reagent. The reaction need not be interrupted. About a one-half cc. sample is pipetted out for each test. To this is added an equal volume of a 1 per cent solution of Michler's ketone in dry benzene. The reaction product is then hydrolyzed by the slow addition of 1 cc. of water. The subsequent addition of several drops of a 0.2 per cent solution of iodine in glacial acetic acid develops a characteristic greenish-blue color when Grignard reagent is present. The reaction is complete when no positive test is obtained for the Grignard reagent (*J. Am. Chem. Soc.* **47**, 2002 (1925)).

7. The ice must be added all at once so that the mixture stays cold at all times and does not become too hot at any one spot. If this happens, the reaction becomes very vigorous, and the mixture is likely to foam out of the flask.

8. The heating with freshly dehydrated lime not only removes traces of water, but gives a product which is entirely free from halogen.

9. It is advisable to use a flask with fractionating side arm (Org. Syn. **1**, 40).

10. If cyclohexyl chloride is used the yield is 68–70 g. (59.5–61 per cent of the theoretical amount).

3. Other Methods of Preparation

Cyclohexylcarbinol has been prepared by the reduction of ethyl hexahydrobenzoate with sodium and alcohol,[1] and by

INSTITUTE 1662

heating an ether solution of cyclohexylmagnesium bromide or chloride with paraformaldehyde.[2]

[1] Compt. rend. **137**, 60 (1903); Ger. pat. 164,294.

[2] Bull. soc. chim. (3) **32**, 574 (1904); Compt. rend. **139**, 343 (1904); Bull. soc. chim. (3) **35**, 544 (1906); Ber. **40**, 4863 (1907).

IX

3-CYCLOHEXYLPROPINE-1

$$C_6H_{11}CH_2CBr=CH_2+NaNH_2 \rightarrow C_6H_{11}CH_2C\equiv CH+NaBr+NH_3$$

Submitted by R. LESPIEAU and M. BOURGUEL.
Checked by ROGER ADAMS and M. M. BRUBAKER.

1. Procedure

A MIXTURE of 120 g. (3 moles) of sodamide (Note 1) and 200 cc. of purified mineral oil (Note 2) is ground together in a mortar until the amide is finely pulverized (Note 3). This suspension is transferred to a 2-l. round-bottom, three-necked flask fitted with a reflux condenser holding a calcium chloride tube, a 500-cc. separatory funnel, and an efficient mechanical stirrer through a mercury seal. The mortar and pestle are rinsed with an additional 250 cc. of the oil which is then added to the reaction flask. This is heated in an oil bath maintained at 160–165°, the stirrer is started and 203 g. (1 mole) of cyclohexylbromopropene (p. 20) is dropped in during one and one-half hours. Ammonia is evolved and this is allowed to pass through the condenser and is collected in water.

After all of the cyclohexylbromopropene has been run in, heating is continued for about two hours, the mixture is cooled and 500 cc. of ether is added. This mixture is poured on 1.5 kg. of cracked ice in a 5-l. flask and then acidified with 280 cc. of concentrated hydrochloric acid. The ether layer is separated, dried over calcium chloride and transferred to a 1-l. modified Claisen flask (Org. Syn. **1**, 40) for distillation. The ether is distilled at ordinary pressure and then the cyclohexylpropine under diminished pressure. The product boiling up to 115°/20

mm. is collected and fractionated. The cyclohexylpropine boils at 58–63°/20 mm. The higher-boiling material is chiefly unchanged cyclohexylbromopropene which may be used again in a subsequent run. The yield of cyclohexylpropine is 80 g. (66 per cent of the theoretical amount not taking into consideration the recovered cyclohexylbromopropene which amounts to about 10 g.) (Note 4). The pure compound boils at 61–63°/24 mm.

2. Notes

1. The sodamide must be free from sodium hydroxide and may be conveniently weighed under the 250 cc. of purified mineral oil which is used to rinse out the mortar. Care must be exercised in the use of old sodamide as it sometimes contains an explosive compound that might cause trouble. The nature of this explosive compound is not definitely known; however, it appears to be associated with the development of a lemon yellow color. Should any part of the sodamide develop this color it is recommended that the whole be destroyed at once.

2. Any clean, high-boiling petroleum oil may be used. None of it should boil below 250°.

3. It is essential that the sodamide be very finely divided. The state of subdivision of the sodamide particles seriously affects the yield of product. A mechanical grinder was used by the original authors who obtained better yields than those reported here.

4. By a similar procedure decine-1 may be made from 2-bromodecene-1 in 68 per cent yield, b.p. 80–82°/22 mm., and 4-phenylbutine-1 from 4-phenyl-2-bromobutene-1 in 60 per cent yield, b.p. 95–99°/17 mm.

3. Other Methods of Preparation

3-Cyclohexylpropine-1 has been prepared in a pure state only by the action of sodamide on cyclohexylbromopropene.[1]

[1] Ann. chim. (10) **3**, 231 (1925). See also, Bull. soc. chim. (4) **7**, 433 (1910).

X

DIACETONAMINE HYDROGEN OXALATE

$$CH_3COCH=C(CH_3)_2+NH_3 \rightarrow CH_3COCH_2C(CH_3)_2NH_2$$

$$CH_3COCH_2C(CH_3)_2NH_2+H_2C_2O_4+H_2O \rightarrow CH_3COCH_2C(CH_3)_2NH_2 \cdot H_2C_2O_4 \cdot H_2O$$

Submitted by P. R. Haeseler.
Checked by Roger Adams and G. S. Hiers.

1. Procedure

A mixture of 200 g. (2 moles) of mesityl oxide (Org. Syn. **1**, 53) and 280 cc. of aqueous ammonia (27 per cent) is placed in a 1-l. round-bottom flask which is equipped with an efficient mechanical stirrer. The stirrer should be inserted through a stopper in such a way that the flask is nearly air-tight. Because of the heat generated during the reaction it is desirable to keep tap water running over the flask. After stirring for several hours (Note 1) the system becomes homogeneous. When this point is reached the stirring is discontinued, and the well-stoppered flask is allowed to stand at room temperature for three days (Note 2).

Dry air is blown through the solution to remove the excess of ammonia, and the solution is then dissolved in its own volume of absolute alcohol. A sample of this solution is titrated with standard oxalic acid, litmus being used as an outside indicator (Note 3). The amount of oxalic acid (Note 4) necessary to form the acid salt is placed in a large evaporating dish and dissolved in 4 l. of 95 per cent alcohol. The amine solution is then slowly run into the acid with constant stirring. During the addition of the last half of the amine solution, the container must be cooled in order to avoid the formation of the neutral oxalate.

The resulting mixture is then heated on a steam cone or an air bath with constant stirring until the temperature of the mixture reaches 70°. The mixture is filtered, while hot, through a previously heated Büchner funnel. The filtrate is immediately placed in a large beaker or evaporating dish for the crystallization of the diacetonamine hydrogen oxalate (Note 5). The residue is treated with boiling alcohol and filtered, the filtrate containing a small additional quantity of the amine hydrogen oxalate. The mother liquor is distilled until nothing further passes over at 78° (Note 6), and the residue is allowed to stand for a day in a cool place. The crystals that separate are washed with cold absolute alcohol and dried. A total yield of 285–320 g. (62–70 per cent of the theoretical amount) of product that melts at 126–127° is obtained (Note 7).

2. Notes

1. The time required varies between three and eight hours, and the lower time limit is very materially favored when the reaction is carried out in the sunlight.

2. The period of three days seems to be the most desirable length of time to allow the reaction mixture to stand; the reaction is not complete in less time and the yields tend to become smaller if a much longer time is employed.

3. The volume of the diluted amine is usually between 800 and 860 cc. A 10-cc. portion of this may be conveniently drawn off with a pipette and usually requires from 35 to 50 cc. of 0.5 N oxalic acid.

4. The end point to litmus occurs when the neutral salt is formed. As the acid salt is desired, twice the amount of oxalic acid calculated above is used. This is usually between 230 and 260 g.

5. If the crystals are allowed to remain in contact with the mother liquor for several hours without filtering, they become somewhat dark in color. This color may be removed by washing with hot absolute alcohol.

6. The alcohol recovered in this way may be used as a solvent

in subsequent runs. When about 3.5 l. of alcohol has been distilled, the residue gives a small yield (10–15 g.) of dark crystals which must be washed several times with warm absolute alcohol to remove most of the color.

7. The product is entirely free from triacetonamine, triacetondiamine and other troublesome condensation products, thus making its purification very simple. There is, however, a small quantity of ammonium hydrogen oxalate mixed with this salt to the extent of 1–1.2 per cent, but since it offers no difficulty when the product is used for synthetic purposes it is usually ignored. A small amount of ammonium salt has practically no effect on the melting point. It is possible to get pure diacetonamine hydrogen oxalate by recrystallizing from absolute alcohol.

3. Other Methods of Preparation

Diacetonamine has been prepared in satisfactory yields by treating a mixture of commercial acetone and calcium chloride with anhydrous ammonia.[1] The preparation from commercial acetone and ammonia is laborious and gives low yields.[2] No yields are given in the older published descriptions of the preparation from mesityl oxide with either aqueous or anhydrous ammonia.[3] The method described here has recently been published.[4]

[1] J. Chem. Soc. **115**, 588 (1919).
[2] Ann. **174**, 136 (1874); **189**, 214 (1877).
[3] Ber. **7**, 1387, 1776 (1874).
[4] J. Am. Chem. Soc. **47**, 1195 (1925).

XI

α, α-DIPHENYLETHYLENE

$$2C_6H_5MgBr + CH_3CO_2C_2H_5 \xrightarrow{H_2O} CH_3(C_6H_5)_2COH + Mg(OH)Br + Mg(OC_2H_5)Br$$

$$CH_3(C_6H_5)_2COH \rightarrow (C_6H_5)_2C = CH_2 + H_2O$$

Submitted by C. F. H. ALLEN and S. CONVERSE.
Checked by HENRY GILMAN and N. J. BEABER.

1. Procedure

IN a 2-l. three-necked flask, fitted with a separatory funnel, reflux condenser and stirrer, is placed 27 g. (1.1 moles) of magnesium turnings. A mixture of 30 g. of bromobenzene and 70 cc. of dry ether is run in and the flask warmed gently with a free flame until the reaction becomes rapid. Stirring is then started and the vessel is surrounded by a dish of cold water. A mixture of 151 g. of bromobenzene (total: 181 g., 1.15 moles) and 380 cc. of dry ether is run in at such a rate as to cause vigorous refluxing; when the addition is complete (one hour) the whole is stirred for ten minutes.

After the flask has been cooled by immersion in ice water, 44 g. (0.5 mole) of dry ethyl acetate (Note 1) in an equal volume of ether is added over a period of twelve minutes. The cooling bath is removed and stirring is continued for ten minutes. When the reaction flask has again been cooled by the ice-water bath, a previously prepared ammonium chloride solution (Note 2) is added, very slowly at first, over a period of ten minutes, during which a pasty solid separates.

The ether layer is decanted into a separatory funnel. To this is added a 50-cc. ether extract of the pasty residue, and the

combined ether solutions are dried by shaking with anhydrous calcium chloride. The solvent is best removed by dropping into a 250-cc. Claisen flask attached to a condenser, and immersed in an oil bath heated at 210–215°. After the ether has distilled, the flask is heated for half an hour, and then the pressure is reduced to about 30 mm., the bath temperature being maintained at about 210° (Note 3). At first a low-boiling fraction consisting of bromobenzene (12–14 g.) and traces of water distil, after which the diphenylethylene comes over as a colorless liquid, the last portions being slightly yellowish. The brownish residue contains polymerization and decomposition products. On redistillation, the pure hydrocarbon boils at 113°/2 mm. (Note 4). The yield is 60-66 g. (67–70 per cent of the theoretical amount based on ethyl acetate (Note 5)).

2. Notes

1. The grade of ethyl acetate used is very important. If ordinary ethyl acetate is used it may be purified by washing with twice its volume of water, drying over fused potassium carbonate, refluxing with phosphorus pentoxide, filtering, and fractionating, whereupon practically all comes over at constant temperature. The addition to the Grignard reagent should be cautious at first, to avoid a vigorous reaction that frequently occurs after about 15 cc. has been added.

2. The ammonium chloride solution is prepared by dissolving 50 g. of ammonium chloride in 150 cc. of water at 25–30°. The literature recommends the use of 30 per cent sulfuric acid for decomposing the magnesium compound; when this is used, the yield drops to 50–55 per cent, probably owing to the ready polymerization of the hydrocarbon in the presence of mineral acids.

3. This heating prior to distillation obviates the necessity of intermediate isolation of the carbinol. The dehydration is evidenced by small explosions when the water drops on the hot reaction mixture.

4. The hydrocarbon is reported to boil at 123–5°/5 mm.; 134°/10 mm.[5]; 139°/11 mm.[6]; 156°/25 mm.[4]; 164°/34 mm.[4]; and at 277°/760 mm.[1]

5. The yield is decreased by about 10 per cent if only an equivalent molecular quantity of phenylmagnesium bromide is used.

3. Other Methods of Preparation

α,α-Diphenylethylene has been prepared by the action of alcoholic potash on unsymmetrical diphenylchloroethane;[1] by the action of aluminium chloride on a mixture of benzene and acetylene tetrabromide[2] or 1,1-dibromoethylene.[3] The carbinol (from which the hydrocarbon is prepared by dehydration) has always been obtained from the Grignard reaction, either by the action of methylmagnesium iodide on benzophenone,[4, 5, 6, 7] or phenylmagnesium bromide on acetophenone[8] or ethyl acetate.[9, 10] The preparation from ethyl acetate appears to be the cheapest and most convenient method, and the method used is adapted from that previously described by Stadnikov.[10]

[1] Ber. **7**, 1409 (1874).
[2] Ann. **235**, 150, 299 (1886).
[3] Ber. **12**, 2245 (1879).
[4] Ber. **35**, 2646 (1902).
[5] Ber. **56**, 2349 (1923).
[6] Ber. **56**, 567 (1923).
[7] J. Am. Chem. Soc. **45**, 554 (1923).
[8] J. prakt. Chem. (2), **87**, 289 (1913).
[9] Ber. **54**, 1856 (1921).
[10] J. Russ. Phys. Chem. Soc. **47**, 2037, 2115 (1915) (C. A. **1916**, 1355).

XII

ETHYL ACETOACETATE

$$2CH_3CO_2C_2H_5 + Na \rightarrow CH_3C(ONa) = CHCO_2C_2H_5 + C_2H_5OH + (H)$$

$$CH_3C(ONa) = CHCO_2C_2H_5 + CH_3CO_2H \rightarrow CH_3COCH_2CO_2C_2H_5 + CH_3CO_2Na$$

Submitted by J. K. H. Inglis and K. C. Roberts.
Checked by C. S. Marvel and F. E. Kendall.

1. Procedure

In a 2-l. round-bottom flask, fitted with an efficient reflux condenser, is placed 500 g. (5.7 moles) of ethyl acetate (Note 1), and 50 g. (2.2 moles) of clean sodium wire or finely sliced sodium (Note 2) is added. The reaction is at first quite slow, and must be started by warming on a water bath (Note 3). After the reaction is once started it proceeds vigorously and cooling is then necessary in order to avoid loss of material through the condenser. When the rapid reaction slows down, the reaction mixture is heated on a water bath until the sodium has completely dissolved. This usually requires about one and one-half hours. At this stage the reaction mixture should be a clear red liquid with a green fluorescence.

This solution is then cooled and made slightly acid by adding about 275 cc. of 50 per cent acetic acid (Note 4). Salt is added if necessary to cause the ester to separate. The ester layer is separated, dried over calcium chloride and fractionally distilled under reduced pressure from a modified Claisen flask (Org. Syn. **1**, 40).

The yield of ester boiling at 76–80°/18 mm. is 105–110 g. (28–29 per cent of the theoretical amount based on the ethyl acetate) (Note 5).

2. Notes

1. The grade of ethyl acetate used is very important. It must be entirely free from water and should contain about 2–3 per cent of alcohol. The absolute ethyl acetate of the U. S. Industrial Alcohol Company is satisfactory for use. If this grade is not available, ordinary ethyl acetate may be purified by washing it with twice its volume of water and drying over fused potassium carbonate, from which it is decanted, and used directly. The ethyl acetate purified in this way contains enough ethyl alcohol to allow the reaction to run well. The ethyl acetate in the wash water may be recovered by distilling through a short column from a steam cone until the vapors reach a temperature of 72°. Dry ethyl acetate containing 2-3 per cent of alcohol has a boiling point range of 2 to 3°.

If the ester is dry enough to use in this reaction it will not give a gelatinous mass of sodium hydroxide when treated with a little sodium.

2. Sodium wire and finely sliced sodium are equally good to use in this reaction. It is important to avoid contamination of the sodium by surface action which converts part of it into sodium hydroxide.

3. It is convenient to arrange the water bath so that it may be heated by passing in steam or cooled by running in cold water.

4. It is advisable to avoid a large excess of acetic acid since it increases the solubility of the ester in water.

5. When larger runs are made the yields increase; thus 2000 cc. of ethyl acetate and 200 g. of sodium give 515–568 g. of ethyl acetoacetate. From a run of this size it is possible to recover about 700 cc. of ethyl acetate. Approximately a proportionate recovery is obtained in smaller runs.

The yield is based on ethyl acetate and not on sodium, because it is uncertain whether one or two moles of sodium react with one mole of ethyl acetate.

3. Other Methods of Preparation

Ethyl acetoacetate has been prepared from ethyl acetate by the action of sodium,[1] sodium ethylate,[2] sodamide,[3] and calcium.[4]

[1] Jahresber. **1863**, 323; **1865**, 302; Z. Chem. **1866**, 5; Ann. **186**, 214 (1877); J. prakt. Chem. (2) **65**, 528 (1902); Ber. **38**, 709 (1905); Am. Chem. J. **40**, 76 (1908); J. Am. Chem. Soc. **30**, 1876 (1908); U. S. pat. 1,425,626 (C. A. **1922**, 3314); U. S. pat. 1,472,324 (C. A. **1924**, 400); J. Soc. Chem. Ind. **43**, 295 T (1924).

[2] Z. Chem. **1868**, 653; Ber. **33**, 3735 (1900); **38**, 709 (1905); Am. Chem. J. **37**, 299 (1907).

[3] J. Chem. Soc. **81**, 1527 (1902); Ber. **35**, 2321 (1902).

[4] J. Chem. Soc. **95**, 161 (1909).

XIII

ETHYL ACETOPYRUVATE

$$C_2H_5O_2CCO_2C_2H_5 + CH_3COCH_3 + C_2H_5ONa \rightarrow CH_3COCH{=}C(ONa)CO_2C_2H_5 + 2C_2H_5OH$$

$$CH_3COCH{=}C(ONa)CO_2C_2H_5 + H_2SO_4 \rightarrow CH_3COCH_2COCO_2C_2H_5 + NaHSO_4$$

Submitted by C. S. Marvel and E. E. Dreger.
Checked by Frank C. Whitmore and Gladys E. Woodward.

1. Procedure

In a 5-l. round-bottom flask fitted with a reflux condenser, a mechanical stirrer (Note 1) and a 1-l. separatory funnel, is placed 2800 cc. of absolute ethyl alcohol (Note 2), and to this is added 125 g. (5.4 moles) of sodium over a period of one to two hours. The stirrer is started and the mixture allowed to cool to room temperature (Note 3), and a mixture of 730 g. (5 moles) of ethyl oxalate (Note 4) and 290 g. (5 moles) of acetone (Note 5) is added slowly over a period of two to three hours. At first a white precipitate forms; this is followed by a yellow precipitate that darkens as the reaction proceeds and later turns yellow again. The temperature rises to about 40°. Toward the end the mixture becomes so thick that stirring is difficult. Stirring is continued for one hour after the addition of the oxalate and acetone mixture. The yellow sodium salt is filtered by suction on two 20-cm. Büchner funnels (Note 6). The reaction flask is rinsed with 200 cc. of absolute ethyl alcohol, which is then used to wash the salt. The filtrate is turbid as a rule, but there is not enough sodium salt in suspension or solution to warrant recovery.

When the sodium salt has been sucked dry, it is returned to the 5-l. flask and treated with 1.5 l. of water and 1 kg. of cracked ice.

The stirrer is started and there is added rapidly a cold sulfuric acid solution made by adding enough ice to 200 cc. of concentrated sulfuric acid (sp. g. 1.84) (Note 7) so that some of the ice is not melted. The stirring is continued for five or ten minutes or until the yellow lumps of the sodium salt disappear. The mixture is then extracted with three 600-cc. portions of benzene (Note 8). The benzene is destilled (Note 9) from the extracts on a water bath and the residue is transferred to a special 2-l. Claisen flask (Org. Syn. **1**, 40) and distilled under diminished pressure. The product boils at 130–132°/37 mm. or 117–119°/29 mm. A small high-boiling fraction is redistilled to yield 20–30 g. more of the ethyl acetopyruvate. The total yield is 480–520 g. (61–66 per cent of the theoretical amount).

2. Notes

1. The stirrer used is a bent glass rod which nearly scrapes the sides of the flask. A simple paddle stirrer is not efficient enough to stir the semi-solid mass.

2. The quality of the absolute alcohol (Org. Syn. **5**, 56) influences the yields decidedly. The amount of alcohol indicated is the smallest which can be used effectively.

3. No better yields were obtained at lower temperatures.

4. The ethyl oxalate used was dried over calcium chloride for a week (Org. Syn. **2**, 23; **5**, 59).

5. The acetone used was commercial acetone dried over calcium chloride for a week and then distilled.

6. The filtration is likely to be slow and may take as much as two or three hours. When a 40-cm. Büchner funnel was used, it was complete in less than one hour.

7. This is enough acid to turn Congo Red paper distinctly blue. If less acid is used, a troublesome emulsion is likely to form. If such an emulsion forms it can be broken by pouring into it a small amount of sulfuric acid cooled by the addition of ice.

8. If less than 600-cc. portions of benzene are used, the danger of emulsion formation is greater.

9. About 1 l. of benzene is recovered.

3. Other Methods of Preparation

Ethyl acetopyruvate has been prepared only by the condensation of ethyl oxalate and acetone in the presence of sodium ethylate.[1] The method given above is based on that of Claisen and Stylos.[2]

[1] Ber. **20**, 2189 (1887); Ger. pat. 43,847; Winther, I, 98 (1887); Ger. pat. Anmeldung, F. 3,299; Frdl. **1**, 218 (1888); J. Phys. Chem. **12**, 4 (1908); J. Chem. Soc. **95**, 1896 (1909).

[2] Ber. **20**, 2188 (1887).

XIV

2-FURANCARBOXYLIC ACID and 2-FURYLCARBINOL
(Pyromucic or Furoic Acid) (Furfuryl Alcohol)

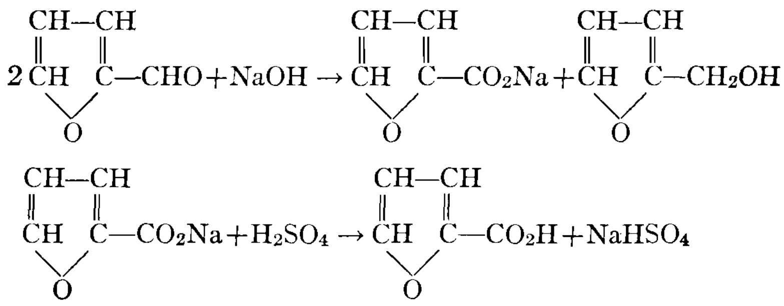

Submitted by W. C. Wilson.
Checked by C. S. Marvel and C. G. Gauerke.

1. Procedure

One kilo (10.4 moles) of furfural (Note 1) is placed in a 4-l. copper can (Note 2) provided with a mechanical stirrer and surrounded by an ice bath. The stirrer is started and the furfural is cooled to 5–8°. When the temperature has fallen to this range, 825 g. of 33.3 per cent technical sodium hydroxide solution (Note 3) is added from a separatory funnel at such a rate that the temperature of the reaction mixture does not exceed 20°. This requires twenty to twenty-five minutes. The rate of addition will depend on the efficiency of the cooling. The stirring is continued for one hour after the addition of the sodium hydroxide solution.

During the reaction considerable sodium 2-furancarboxylate separates in fine scale-like crystals. The reaction mixture is allowed to come to room temperature and just enough water is added to dissolve this precipitate. This requires about 325 cc.

The solution is then placed in a continuous extraction apparatus (Org. Syn. **3**, 88) and the 2-furylcarbinol is extracted with 1500–2000 cc. of ether (Note 4). The extraction is complete after six to seven hours.

When extraction is complete the ether solution of 2-furylcarbinol is distilled until the temperature of the liquid (not the vapor) reaches 95°. Then the residue is distilled under diminished pressure. Some ether and water come over first and the temperature then rises rapidly to the boiling point of 2-furylcarbinol. The yield of 2-furylcarbinol boiling at 75–77°/15 mm. is 310–325 g. (61–63 per cent of the theoretical amount) (Note 5).

The water solution containing the sodium 2-furancarboxylate is made acid to Congo Red paper with 40 per cent sulfuric acid. This requires about 400 cc. On cooling, the 2-furancarboxylic acid crystallizes and is filtered with suction. The crude acid contains considerable sodium hydrogen sulfate and is deeply colored. For purification it is dissolved in 2300 cc. of boiling water containing about 60 g. of decolorizing carbon (Norite) and the solution is boiled for about forty-five minutes. It is then filtered and cooled with stirring to 16–20° (Note 6) and the 2-furancarboxylic acid which crystallizes is filtered by suction. The product thus obtained is light yellow in color but darkens somewhat on standing. The yield is 360–380 g. (51–54 per cent of the theoretical amount) (Note 7). This acid melts at 121–124° and by titration is 93–95 per cent pure. It is pure enough for many purposes.

For further purification the material may be recrystallized from hot water, or dissolved in alkali and reprecipitated, or distilled under reduced pressure or sublimed. Each of these operations involves considerable loss of product, either through solubility or through decomposition by heat. The best-appearing product is obtained by distillation under reduced pressure. The crude acid is distilled from a Claisen flask with a delivery tube set low in order that the acid need not be heated much above the boiling point. The product boiling at 141–144°/20 mm. is pure white and melts at 125–132° (Note 8). The yield of distilled acid is about 75–85 per cent of the weight of the crude acid.

2. Notes

1. Technical furfural (sp. g. 1.15) was used in this preparation. It boiled over a range of 140–160° and contained about 2 per cent water.

2. A one-gallon ice-cream freezer is a very convenient apparatus to use for the reaction.

3. This amounts to about 28 per cent pure sodium hydroxide or 5.77 moles.

4. Carbon tetrachloride may be used for the extraction of the 2-furylcarbinol. This requires altering the extraction apparatus to remove the solvent from the bottom of the extraction bottle. Some difficulties are met in working with carbon tetrachloride, due to the liberation of acid which causes the 2-furylcarbinol to change into the water-insoluble form. The yields of both 2-furancarboxylic acid and 2-furylcarbinol are much lower when carbon tetrachloride is used as a solvent.

5. The 2-furylcarbinol thus obtained is entirely soluble in water and has only a slight yellow tinge. If it is to be stored, about 0.5 to 1 per cent of its weight of urea should be added as a stabilizer.

6. If the solution is cooled lower than 16°, sodium hydrogen sulfate ($NaHSO_4 \cdot 10H_2O$) begins to separate with the 2-furancarboxylic acid.

7. The low yields of 2-furancarboxylic acid are due partly to the formation of tarry by-products and partly to loss through water solubility. The mother liquors contain about 2.5 g. of 2-furancarboxylic acid per 100 cc. This may be recovered by extraction with ether.

8. The melting point of the 2-furancarboxylic acid is not very sharp. The distilled acid which titrates 100 per cent softens noticeably at 125° and melts completely at 132°. (Gelissen and van Roon, *Rec. trav. chim.* **43**, 361 (1924)).

3. Other Methods of Preparation

2-Furancarboxylic acid may be prepared by the dry distillation of mucic acid,[1] by the oxidation of furfural with potassium

permanganate[2] and by the Cannizzaro reaction from furfural.[3] The last method has been found to be the most satisfactory from a practical standpoint.

2-Furylcarbinol has been prepared by the reduction of furfural with sodium amalgam[4] but the Cannizzaro reaction[5] is the better practical method of preparation.

[1] Ann. chim. phys. (2) **9**, 365 (1818).

[2] Ann. **116**, 259 (1860); **261**, 380 (1891); Bull. soc. chim. (3) **17**, 610 (1897); J. Chem. Soc. **79**, 515, 847 (footnote) (1901).

[3] Jahresber. **1860**, 269; Ann. **165**, 279 (1873); **258**, 119 (1890); **261**, 255 (1891); Am. Chem. J. **3**, 37 (1881–2); **44**, 404 (1910).

[4] Ann. Suppl. **3**, 275 (1864–5).

[5] Jahresber. **1860**, 269; Ann. **165**, 279, 300 (1873); **239**, 374 (1887); **272**, 293 (1892); Bull. soc. chim. (3) **21**, 583 (1899); Ber. **35**, 1855 (1902); J. Am. Chem. Soc. **46**, 2576 (1924).

XV

α-GLYCERYL PHENYL ETHER

$$C_6H_5ONa + CH_2ClCHOHCH_2OH \rightarrow C_6H_5OCH_2CHOHCH_2OH + NaCl$$

Submitted by T. S. WHEELER and F. G. WILLSON.
Checked by H. T. CLARKE and E. R. TAYLOR.

1. Procedure

To 500 cc. of absolute alcohol (Note 1) in a 1-l. flask fitted with a reflux condenser is added gradually 46 g. (2 moles) of sodium in thin slices (Note 2) at such a rate that the mixture boils steadily. When all the sodium has been added, the mixture is heated on the steam bath until the few remaining pieces of sodium barely react. Pure commercial molten phenol is now added gradually through the condenser until all of the sodium has reacted, and then the remainder of 188 g. (2 moles) of phenol is added. This is followed by the addition of 221 g. (2 moles) of redistilled glycerol α-monochlorohydrin (Org. Syn. **2,** 33) in small portions, the rather vigorous reaction being allowed to complete itself before each subsequent addition.

When all has been added, the mixture is heated on the steam bath for about one hour. The end of the reaction is determined by withdrawing a sample, filtering it, and heating the filtrate in which little or no precipitate should form. The mixture is filtered hot by suction through filter cloth or heavy filter paper (Note 3), the precipitate being washed with three 50-cc. portions of absolute alcohol. The filtrate and washings are distilled on the steam bath under slightly reduced pressure until no more alcohol comes over; the residue, which sets to a white waxy solid on cooling, is transferred to a distilling flask and distilled under reduced pressure, collecting the fraction boiling at 175–190°/15 mm. In this

way 235–275 g. of a product melting at 43–49° is obtained. On redistillation, 205–215 g. (61–64 per cent of the theoretical amount) of a fraction which boils at 185–187°/15 mm. and melts at 48–53° is obtained (Note 4.)

2. Notes

1. Absolute alcohol is required in order that all the sodium chloride formed may be precipitated and that none may remain to contaminate the product.

2. More rapid solution of the sodium can be obtained if the metal be granulated prior to its addition to the alcohol. This is done by covering the sodium with ten times its weight of dry xylene and heating to 120° in a stout round-bottom flask (Nef, *Ann.* **280,** 307 (1894) and Read and Lucarni, *Ind. Eng. Chem.* **17,** 480 (1925)). The flask is then well corked, wrapped in a thick, dry cloth and well shaken for a short time. The metal is thus obtained in the form of small spheres, the size of which is controlled by the time and rapidity of the shaking. A dry bucket should be kept at hand so that the flask can be dropped into it in case of breakage. Not more than 30 g. of sodium should be treated at one time.

Vigorous mechanical stirring may be used to advantage in place of shaking by hand.

3. The precipitate of sodium chloride obtained is very sludgy and filters poorly through fine-fibered papers.

4. Small traces of impurity lower the melting point very considerably, and by repeated recrystallization from anhydrous ether the melting point can be raised to 70°. The product crystallizes from the ether in very long, flexible needles, forming a spongy mass which filters with some difficulty. In order to obtain a high melting point, complete removal of the solvent, preferably by warming to 50° under reduced pressure, is essential.

3. Other Methods of Preparation

α-Glyceryl phenyl ether has been prepared by heating phenyl glycide ether in a closed tube with water at 120°;[1] by the action

of benzene diazonium chloride on glycerol at 100°;[2] by heating phenol with excess of glycerol and dehydrated sodium acetate in an inert atmosphere at an elevated temperature;[3] by heating phenol with α-monochlorohydrin and caustic alkali at 100°.[4] None of these methods gives as good a yield as that described above.

[1] Ber. **24**, 2147 (1891); *Cf.* Rec. trav. chim. **34**, 102 (1915).
[2] Ber. **36**, 2064 (1903).
[3] Monatsh. **29**, 952 (1908).
[4] J. Chem. Soc. **101**, 310 (1912).

XVI

n-HEPTYL ALCOHOL

$$CH_3(CH_2)_5CHO + 2H \rightarrow CH_3(CH_2)_5CH_2OH$$

Submitted by H. T. CLARKE and E. E. DREGER.
Checked by C. S. MARVEL and L. T. SANDBORN.

1. Procedure

IN a 12-l. flask fitted with a mechanical stirrer and a short reflux condenser are placed 1800 g. (32.2 moles) of iron filings (Note 1), 3 l. (52.5 moles) of glacial acetic acid, 3 l. of water, and 450 g. (3.95 moles) of heptaldehyde (Note 2). The mixture is heated on the steam bath, with stirring, for six to seven hours (Note 3). The flask is then fitted to an apparatus for steam distillation (Org. Syn. **2**, 80) and the mixture distilled in a current of steam (Note 4) until no more oil passes over (7–8 l. of distillate). The oil is then separated, and the aqueous part distilled to recover a small quantity of dissolved or suspended heptyl alcohol.

The combined product is mixed with 1 l. of 20 per cent sodium hydroxide solution and stirred on the steam bath for four hours, in order to hydrolyze a small proportion of heptyl acetate. The oil is then separated and distilled, and the portion boiling at 172–176° collected. The residue in the flask is mixed with about 100 cc. of water and distilled, whereupon a further small quantity of oil passes over with the steam. This distillate and the forerun are freed of the bulk of the water in a separatory funnel, and distilled from a smaller flask. In this way the total yield of *n*-heptyl alcohol boiling at 172–176° (uncorr.) is 350–370 g. (75–81 per cent of the theoretical amount). The alcohol may be redistilled under reduced pressure, and it passes over almost without loss at 71–72°/12 mm.

2. Notes

1. The iron filings used were free of grease and ore. Ninety-five per cent of the filings passed an 80-mesh screen and 60 per cent passed a 100-mesh screen. Grade "D" iron supplied by the Master Builders Company, Cleveland, Ohio, is ready for use and very satisfactory.

2. The heptaldehyde should be a freshly distilled product, boiling at 154–156°.

3. The reaction may be successfully carried out without a stirrer, but the time of heating must then be lengthened to twelve to fifteen hours.

4. It is advisable to begin the steam distillation at once, while the mixture is hot, and to avoid the use of a free flame, which might cause breakage of the flask. If foaming, or too great a volume, hinders a rapid distillation, it is well to decant part of the contents of the flask and to conduct the steam distillation in two portions.

3. Other Methods of Preparation

Heptyl alcohol has been prepared by the reduction of heptaldehyde with zinc dust and acetic acid,[1] with sodium amalgam and acetic acid,[2] with sodium in toluene and acetic acid,[3] and with hydrogen and a platinum catalyst.[4] Heptaldehyde has also been reduced biochemically by adding it to a fermenting sugar solution.[5] Heptyl alcohol has been prepared by the reduction of heptoamide with sodium and amyl alcohol.[6]

The above method is based on a process described by A. J. Hill and Edith H. Nason[7] for the reduction of cinnamaldehyde.

[1] Ann. **124**, 352 (1862); *cf.* Ber. **16**, 1723 (1883).
[2] Ann. **177**, 303 (1875); **189**, 2 (1877); **200**, 102 (1880).
[3] J. Biol. Chem. **35**, 281 (1918).
[4] J. Am. Chem. Soc. **45**, 1076 (1923).
[5] Biochem. Zeit. **59**, 183 (1914).
[6] Monatsh. **25**, 1087 (1904).
[7] J. Am. Chem. Soc. **46**, 2236 (1924).

XVII

n-HEXYL ALCOHOL

$$CH_3(CH_2)_2CH_2Br + Mg \rightarrow CH_3(CH_2)_2CH_2MgBr$$

$$CH_3(CH_2)_2CH_2MgBr + \underset{\diagdown\ O\ \diagup}{CH_2\text{-}CH_2} \rightarrow$$

$$CH_3(CH_2)_4CH_2OMgBr \xrightarrow{H_2O} CH_3(CH_2)_4CH_2OH$$

Submitted by E. E. Dreger.
Checked by Roger Adams and G. S. Hiers.

1. Procedure

In a 5-l. round-bottom flask, fitted with a stirrer, separatory funnel and a reflux condenser to the upper end of which a calcium chloride tube is attached, is placed 150 g. of magnesium turnings. A small crystal of iodine (Note 1) and about 100 cc. of a mixture of 822 g. (6 moles) of *n*-butyl bromide and 2 l. of anhydrous ethyl ether are added. As soon as the reaction starts, 350 cc. of anhydrous ether is added and the remainder of the *n*-butyl bromide solution is dropped in at such a rate that the mixture boils continuously. The time of addition (one and one-half hours) may be decreased by cooling the flask externally. Stirring is started as soon as enough liquid is present in the flask.

When all has been added (Note 2), 278 g. (6.3 moles) of ethylene oxide (Note 3) (previously dried with soda lime) is added through a tube (3 or 4 mm. in diameter) the end of which is about 20 mm. above the surface of the liquid (Note 4), the temperature being kept below 10° by cooling in an efficient ice-and-salt bath (Note 5). This addition requires four to six hours. When all has

been added the ice bath is removed; the temperature of the mixture generally rises enough to cause gentle boiling. When this ceases the mixture is warmed on a steam bath for one hour longer.

The condenser is then arranged for downward distillation, and when about 1 l. of ether has distilled (Note 6) the receiver is changed and 1 l. of dry benzene (Note 7) is added; distillation is continued with stirring until the temperature of the distilling vapor reaches 65°. The mixture is then boiled under reflux for one hour. Usually by this time it has become so viscous that stirring is no longer efficient. The mixture is then allowed to cool and is decomposed with 2 l. of an ice-water mixture. The precipitated magnesium hydroxide is dissolved by adding a sufficient quantity of 30 per cent sulfuric acid and enough ice to keep the mixture cold.

The mixture of benzene and hexyl alcohol is now distilled in a current of steam; about 7 l. of distillate must be collected before all of the product is distilled. The oily layer is separated and the watery portion distilled until free of hexyl alcohol. The oil so obtained is added to the main quantity and the watery portion again distilled. The united product is now stirred on the steam bath for one to two hours with 1 l. of 20 per cent sodium hydroxide solution and again subjected to steam distillation, as before. The oily product so obtained is then distilled under atmospheric pressure with the use of a good fractionating column. The fraction boiling up to 85° is mostly benzene and water. The fraction boiling between 85° and 154° is collected separately for redistillation, and the fraction boiling at 154–157° collected as pure material. There is practically no high-boiling residue. The yield (Note 7) is 368–380 g. (60–62 per cent of the theoretical amount) (Note 8).

2. Notes

1. The reaction between the ethereal solution of butyl bromide and the magnesium frequently starts without any assistance, but the presence of a trace of iodine is of no disadvantage and renders more certain the beginning of the reaction.

2. The butyl bromide appears to react as fast as it is added, so that there is no need of stirring or warming the butylmagnesium bromide solution before adding the ethylene oxide. The small amount of unattacked magnesium has no influence on the subsequent reactions.

3. A convenient arrangement consists of placing the ethylene oxide tank on suitable scales and noting the proper decrease in weight. The gas may be passed through a short tower filled with soda lime and then through a spiral condenser surrounded with salt and ice.

4. If the mouth of the delivery tube is beneath the surface, troublesome clogging occurs.

5. The first reaction appears to consist of the formation of an oxonium addition product of the ethylene oxide and the butylmagnesium bromide.

6. Careful watching is necessary at this point, since if the distillation is carried too far a violent reaction, apparently a rearrangement of the initial addition product may set in.

7. By the use of benzene as a diluent the reaction referred to in Note 6 takes place smoothly and without violence; without it the yield is only about 200 g.

8. Instead of adding the condensed ethylene oxide, it may be dissolved in 350 cc. of chilled anhydrous ether which is added during the course of one to two hours. In this case, however, the yields are lower, apparently owing to the vaporization of some of the ethylene oxide.

3. Other Methods of Preparation

n-Hexyl alcohol has been prepared by the reduction of ethyl caproate by means of sodium and absolute alcohol[1] alone or in anhydrous ammonia solution; [2] by the reduction of *n*-caproamide by means of sodium and absolute alcohol; [3] by the reduction of *n*-caproaldehyde by means of sodium amalgam in dilute sulfuric acid; [4] and by means of living yeast.[5] It has also been produced by the action of nitrous acid upon *n*-hexylamine; [6] by the action of sodium upon a mixture of ethyl alcohol and *n*-butyl alcohol; [7]

and by the interaction of *n*-propylmagnesium bromide and trimethylene oxide,[8] benzene being employed as a diluent as in the foregoing directions.

[1] Bull. sci. acad. roy. Belg. **158**, 77 (1905) (Chem. Zentr. **1905**, II, 214); Bull. soc. chim. (3) **33**, 826 (1905); Ger. pat. 164,294 (Chem. Zentr. **1905**, II, 1700).

[2] Compt. rend. **156**, 1020 (1913).

[3] Compt. rend. **138**, 149 (1904).

[4] Ann. **187**, 135 (1877).

[5] Biochem. Zeit. **67**, 26 (1914) (Chem. Zentr. **1915**, I, 618).

[6] Ber. **16**, 744 (1883).

[7] J. Chem. Soc. **117**, 334 (1920).

[8] J. Am. Chem. Soc. **38**, 2484 (1916).

XVIII

MANDELIC ACID

$$C_6H_5CHO + NaHSO_3 \rightarrow C_6H_5CHOHOSO_2Na$$

$$C_6H_5CHOHOSO_2Na + NaCN \rightarrow C_6H_5CHOHCN + Na_2SO_3$$

$$C_6H_5CHOHCN + HCl + 2H_2O \rightarrow C_6H_5CHOHCO_2H + NH_4Cl$$

Submitted by B. B. CORSON, RUTH A. DODGE, S. A. HARRIS and J. S. YEAW.
Checked by C. S. MARVEL and M. M. BRUBAKER.

1. Procedure

IN a 4-l. wide-mouthed glass jar, fitted with a mechanical stirrer, is placed a solution of 150 g. (3 moles) of sodium cyanide (Note 1) in 500 cc. of water and 318 g. (3 moles) of U.S.P. benzaldehyde. The stirrer is started and 850 cc. of a saturated solution of sodium bisulfite (Note 2) is added to the mixture, slowly at first and then in a thin stream. The time of addition is ten to fifteen minutes. During the addition of the first half of this solution, 900 g. of cracked ice is added to the reaction mixture, a handful at a time. The layer of mandelonitrile which appears during the addition of the sulfite solution is separated from the water in a separatory funnel. The water is extracted once with about 150 cc. of benzene, the benzene is evaporated, and the residual mandelonitrile is added to the main portion.

The crude nitrile (about 290 cc.) is placed at once (Note 3) in a 25 cm. evaporating dish, and 425 cc. of C.P. concentrated hydrochloric acid (sp. g. 1.19) is added. The hydrolysis is allowed to proceed in the cold (Note 4) for about twelve hours, after which the mixture is heated on a steam bath to remove the water and excess hydrochloric acid. After heating for five to six hours it is advisable to cool the mixture (Note 5) and

filter the ammonium chloride and mandelic acid mixture that separates. The filtrate is then evaporated to dryness. This residue is added to the solid material obtained before. The product is deeply colored and must be dried in the air and light for at least twenty-four hours. The total yield of the crude mandelic acid-ammonium chloride mixture is 370–390 g., depending on the amount of moisture. The mixture of ammonium chloride and mandelic acid is ground in a mortar, transferred to a 2-l. flask, and washed twice with 750-cc. portions of cold benzene (Note 6). The insoluble portion is transferred to a suction funnel and sucked dry.

Either of two methods may be used to extract the mandelic acid from the ammonium chloride.

A. *Extraction with Benzene.*—The mandelic acid is separated from the ammonium chloride by extraction with hot benzene. This is best done by dividing the solid mixture into ten approximately equal parts (Note 7). One of these portions is placed in flask with 1 l. of boiling benzene. After a few minutes the hot benzene solution is decanted through a suction funnel (Note 8). The filtrate is cooled in an ice bath and the mandelic acid that crystallizes is filtered with suction. The benzene is returned to the extraction flask containing the residue from the first extraction, and a new portion of the ammonium chloride-mandelic acid mixture is added and extracted as before. The process is repeated until the mandelic acid is completely removed from the ammonium chloride (Note 9).

The yield of pure white mandelic acid melting at 118° is 229–235 g. (50–52 per cent of the theoretical amount based on benzaldehyde).

B. *Extraction with Ether* (Note 10).—The solid mixture is transferred to a 2-l. flask and shaken ten minutes with 750 cc. of ether. The ether solution is decanted through a suction filter and the solid thrown onto the filter and pressed dry. The solid is then returned to the flask and shaken with 400 cc. of ether. This mixture is filtered by suction and the solid washed twice on the filter with 250 cc. portions of ether. Each portion is allowed to drain through the filter several times while the solid is kept

porous with a spatula. The combined ether filtrate is then filtered through an ordinary funnel (Note 11). The ether solution is placed in a 3-l. round-bottom flask and 750 cc. of toluene (Note 12) is added. The mixture is distilled on a steam bath through an efficient fractionating column as long as it distils easily and about 1100–1400 cc. of distillate is collected. The temperature of the vapor rises to about 70°. The mixture is then heated over a free flame until the temperature in the column is 95°; about 300 cc. distils (Note 13). The residual liquid is poured while still hot into a large beaker immersed in ice water. The liquid (about 900 cc.) is stirred by hand until it has become a thick crystal mush. The cooling is continued for two hours with occasional stirring so as to bring the temperature down to 5–10°. The mixture is filtered with suction and the solid pressed dry. It is then thoroughly washed on the filter with 300 cc. of toluene in several portions (Note 14).

The yield is the same as that obtained by method (A).

2. Notes

1. This reaction and the subsequent hydrolysis should be carried out in a good hood as some hydrogen cyanide is liberated. The sodium cyanide used was the technical "cyan-egg," containing about 92–95 per cent of cyanide.

2. This saturated solution is best prepared by stirring 1500 g. of technical sodium bisulfite (97–100 per cent) with 2 l. of water and filtering to remove the excess salt. The specific gravity of this solution is 1.37–1.39.

3. The mandelonitrile should be mixed with hydrochloric acid as soon as it is separated from the water. Wood and Lilley (*J. Chem. Soc.* **127**, 95 (1925)) have found that it undergoes rapid rearrangement to the isonitrile. Hence if it is allowed to stand long before the hydrolysis, the yield of mandelic acid is reduced.

4. The hydrolysis can be carried out in the hot, but the final product may be deeply colored.

5. It is advisable to stir the mixture during the cooling in order to break up the lumps and thus obtain a product that can be more easily filtered.

6. If the crude product is not first washed with cold benzene the final product is usually colored. Very little mandelic acid is lost by this washing.

7. The entire amount of the ammonium chloride-mandelic acid mixture may be boiled with the benzene but this gives a supersaturated solution of the acid in the benzene and much difficulty is met in the filtration. The solubility of mandelic acid in hot benzene is approximately 1 g. in 50 cc.

It may be better to carry out the extraction in a Soxhlet apparatus or an apparatus of the type described in Org. Syn. **2**, 49.

8. The funnel should be previously heated and have fairly large holes so as not to be clogged by the mandelic acid that begins to crystallize as soon as the solution cools slightly. Only a slight suction should be applied during filtration.

9. Usually two or three extractions of the ammonium chloride residues after the addition of the last portion of the crude mixture are necessary in order to obtain all of the mandelic acid. On concentrating the benzene used for the extraction, about 5 g. of impure mandelic acid may be obtained. To diminish mechanical losses it is recommended that the same container be used to collect and crystallize the several filtrates.

10. The ether extraction method (B) is quicker, especially when several runs are to be made. Mandelic acid is obtained in the same yield by this method. The benzene extraction may be better for small preparations, or when a single run is to be made.

11. An occasional water layer should be removed in a separatory funnel.

12. Benzene works almost as well as toluene; xylene can also be used.

13. The temperature in the column is a better guide than the volume of distillate. A few porous chips should be added to prevent bumping. The ether-toluene solution should not stand long before distillation since mandelic acid is apt to separate. The heating with steam and with the free flame should be done quickly since prolonged heating lowers the yield.

14. The mother liquors are worked up for toluene, but it is not profitable to try to recover the small amount of impure mandelic acid which they contain.

3. Other Methods of Preparation

Mandelic acid is best prepared by the hydrolysis of mandelonitrile with hydrochloric acid. The mandelonitrile has been prepared from amygdalin,[1] by the action of hydrocyanic acid on benzaldehyde,[2] and by the action of sodium or potassium cyanide on the sodium bisulfite addition product of benzaldehyde.[3]

The method in the procedure differs from any previously described in that the sodium bisulfite addition product of benzaldehyde is prepared in the presence of sodium cyanide and the nitrile is formed immediately.

[1] Ann. **4**, 246 (1832); **18**, 310 (1836); Ber. **16**, 1566 (1883).

[2] Ann. **139**, 299 (1866); **193**, 38 (1878); Ber. **14**, 239 (1881); Rec. trav. chim. **28**, 254 (1909); J. Chem. Soc. **113**, 12 (1918).

[3] Ber. **4**, 980 (1871); Arch. Pharm. **202**, 385 (1873); Ger. pat. 85,230; Frdl. **4**, 160 (1895); Chem. Ztg. **20**, 90 (1896).

XIX

α-METHYL-*d*-GLUCOSIDE

$$C_6H_{11}O_5OH + CH_3OH \rightarrow C_6H_{11}O_5OCH_3 + H_2O$$

Submitted by B. HELFERICH and W. SCHÄFER.
Checked by H. T. CLARKE and M. R. BRETHEN.

1. Procedure

DRY hydrogen chloride (Org. Syn. **2**, 30) is passed into 200 g. of anhydrous methyl alcohol (Note 1), with ice cooling and exclusion of moisture, until the increase in weight amounts to 5 g. This solution is then diluted with 1800 g. of methyl alcohol, a 0.25 per cent solution of hydrogen chloride being thus obtained. To this is added 500 g. (2.77 moles) of finely powdered anhydrous *d*-glucose (Note 2), and the mixture boiled under reflux for seventy-two hours, a clear solution being obtained after the first fifteen minutes' boiling. It is well to attach a soda-lime tube to the upper end of the condenser, in order to exclude moisture. The clear pale yellow solution is cooled to 0°, and crystallization induced by scratching or by inoculation with a trace of α-methyl-*d*-glucoside. After standing for twelve hours at 0° the first crop is filtered by suction and washed twice with 100-cc. portions of cold methyl alcohol. The yield is 85–120 g. of a product melting at 165°.

The mother liquor and washings are returned to the flask and again boiled for seventy-two hours under reflux. The liquid is concentrated to 800 cc. and again chilled to 0°, inoculated and allowed to stand at 0° for twenty-four hours. The second crop of glucoside so obtained is filtered by suction and washed with three 100-cc. portions of cold methyl alcohol. This yield is 110–145 g., melting at 164–165°. The mother liquor and washings are combined and concentrated to about 300 cc., chilled to 0°,

and again inoculated and allowed to stand for twenty-four hours. The resulting mush of crystals is diluted with twice its weight of absolute ethyl alcohol, and after standing twenty-four hours at 0°, the third crop of glucoside is filtered (Note 3). This is recrystallized from 2.5 parts of methyl alcohol. The yield is 30–36 g., melting at 164–165°.

The total yield amounts to 260–266 g. (48.5–49.5 per cent of the theoretical amount). The product is contaminated by slight traces of *d*-glucose and possesses a very faint reducing power towards Fehling's solution. For complete purification it is recrystallized (with practically no loss and practically no change in melting point) from five parts of methyl alcohol with the use, if necessary, of decolorizing carbon.

2. Notes

1. All of the methyl alcohol used in this preparation must be anhydrous and free of acetone.

2. Slight impurities in the *d*-glucose are apt strongly to color the reaction mixture but do not materially affect the yield.

3. The final mother liquor, on long standing, deposits a further crop (about 6 g.) of crystals which melt at 94–96° and consist largely of β-methyl glucoside. A further quantity of the α-glucoside may be obtained by distilling all the ethyl alcohol and boiling the residue with methyl alcoholic hydrogen chloride; it is questionable, however, whether the yield repays the time spent on the operation.

3. Other Methods of Preparation

The above procedure is based on that of Emil Fischer.[1] It differs, however, in the important detail that the use of an autoclave or pressure bottle is avoided,—a simplification due to Bourquelot.[2] The biochemical synthesis of Bourquelot has been developed to a preparative method by Aubry,[3] but it is less convenient and gives poorer yields.

[1] Ber. **28**, 1151 (1895).

[2] Ann. chim. (9) **3**, 298 (1915). *Cf.* Zemplen and Tulok; Aberhalden, *Biochemisches Handlexikon* **10**, 770 (1923). Unpublished observation.

[3] J. pharm. chim. (7) **10**, 202 (1914).

XX

MYRISTIC ACID

$$CH_2(OCOC_{13}H_{27})CH(OCOC_{13}H_{27})CH_2(OCOC_{13}H_{27}) + 3NaOH \rightarrow 3C_{13}H_{27}CO_2Na + CH_2OHCHOHCH_2OH$$

$$C_{13}H_{27}CO_2Na + HCl \rightarrow C_{13}H_{27}CO_2H + NaCl$$

Submitted by G. D. Beal.
Checked by H. T. Clarke and E. R. Taylor.

1. Procedure

In a 2-l. round-bottom flask are placed 100 g. (0.14 mole) of pure (Note 1) trimyristin (p. 100) and 200 cc. of 10 per cent sodium hydroxide solution. The mixture is heated on a steam bath for two hours, with frequent shaking or stirring until the trimyristin has become emulsified. It is then diluted with 300 cc. of water and the heating is continued for another half hour, by which time the solution should be almost clear, indicating complete saponification. The solution is now poured with stirring into a hot solution of 650 cc. of water and 100 cc. of 20 per cent hydrochloric acid. The free acid which separates is not entirely clear, owing to the presence of unchanged sodium salt (Note 2). A gentle current of steam is passed into the hot mixture until the oily layer is transparent; this requires about fifteen minutes. The acid is allowed to cool and solidify; it is removed and freed of small quantities of salt and water by filtering through paper in a steam-jacketed funnel. The yield is 84–90 g. (89–95 per cent of the theoretical amount) of a colorless product (Note 3) which melts at 52–53° (Note 4).

2. Notes

1. If the trimyristin is not pure white and free of nutmeg oil, it will be necessary to purify the resulting acid by distillation

under reduced pressure. It boils at 250°/100 mm. and 195°/15 mm.

2. As much as 15–20 g. of sodium salt may be found in the acid at this point if care be not taken to insure its decomposition. A corresponding amount of 35 per cent hydrochloric acid may be used. An excess of acid does no harm.

3. If desired, the acid may be recrystallized from petroleum ether (b.p., 40–60°) (F. H. Carr, private communication).

4. The melting point is not appreciably raised by recrystallization from petroleum ether. The highest melting point recorded in the literature is 53.8°.

3. Other Methods of Preparation

Myristic acid occurs as a glyceride in many vegetable fats and oils, in particular in coconut oil,[1] its isolation from which involves separation from homologs by fractional distillation of the acids or their esters. The trimyristin obtained from nutmegs[2] (p. 100) or from the seeds of *Virola venezuelensis*[3] forms the most suitable source.

[1] Ann. **66**, 314 (1848).
[2] Ber. **12**, 1668 (1879).
[3] Ber. pharm. Ges. **11**, 263 (1901) (Chem. Zentr. **1901**, II, 189).

XXI

d- and *l*-OCTANOL-2

(Optically Active *Sec.*-Octyl Alcohols)

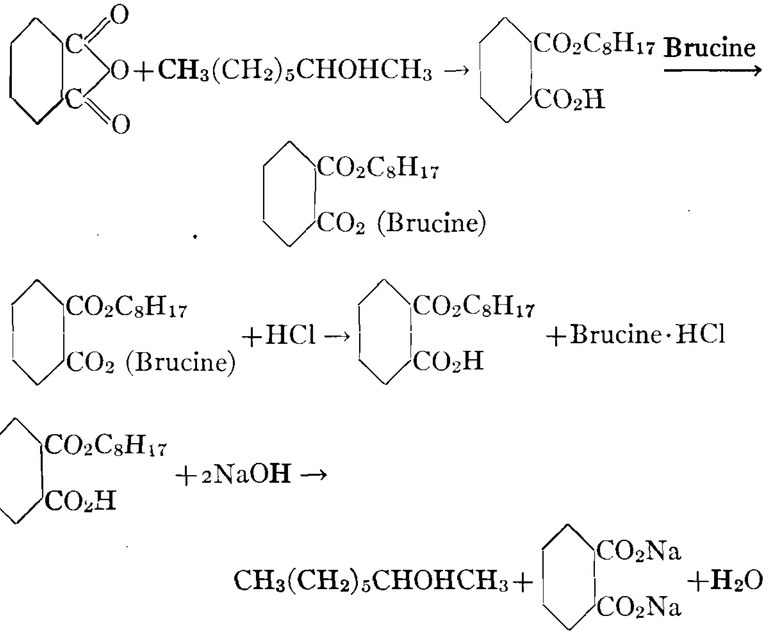

Submitted by JOSEPH KENYON.
Checked by ROGER ADAMS and F. E. KENDALL.

1. Procedure

A. *Preparation of Sec.-Octyl Hydrogen Phthalate.*—A mixture of 130 g. (1 mole) of *sec.*-octyl alcohol (Org. Syn. **1**, 61) and 148 g. (1 mole) of phthalic anhydride is heated for twelve to fifteen hours in a flask surrounded by an oil bath at 110–115° (Note 1). During the heating the mixture should be mechanically stirred

or shaken occasionally to give a homogeneous liquid. The cooled reaction mixture is added to about 8 l. of water which contains 150 g. (1.5 moles) of anhydrous sodium carbonate. The solid material gradually goes into solution, and if the resulting solution is perfectly clear, dilute hydrochloric acid is added in slight excess, thus precipitating the *sec.*-octyl hydrogen phthalate as an oil which rapidly turns to a solid; if the alkaline solution is not clear owing to the presence of methyl hexyl ketone in the original alcohol, it should be extracted with ether to remove the ketone before acidifying with hydrochloric acid.

The octyl hydrogen phthalate is filtered, washed with water, ground thoroughly with water in a mortar and finally filtered and dried. For complete purification it may be crystallized either from petroleum ether (b.p. 60–70°) or glacial acetic acid from which it separates as needles melting at 55°. The crude material, however, is perfectly satisfactory for the following experiments. The yield is nearly quantitative if the *sec.*-octyl alcohol is pure (Note 2).

B. *Resolution.*—A warm solution of 278 g. (1 mole) of *sec.*-octyl hydrogen phthalate and 600 cc. of acetone is treated with 394 g. (1 mole) of brucine and the mixture warmed until the solution is clear. Upon cooling, the crystals of brucine salt (A) form. These are filtered, pressed and washed in the funnel with 250 cc. of acetone. The combined filtrate and washings are concentrated to about 50 per cent of their original volume and then poured into dilute hydrochloric acid (slightly more than the calculated amount) which causes the precipitation of the *sec.*-octyl hydrogen phthalate. After it sets to a crystalline mass, it is filtered, washed with cold water and dried. This weighs approximately one-half of the original ester used and has a rotation $(\alpha)_{5461} -47°$ in absolute alcohol solution (Note 3).

The crystals (A) are dissolved in a minimum amount of hot ethyl alcohol and decomposed by pouring the solution into dilute hydrochloric acid. The weight of the ester thus obtained is about half of that originally taken and its rotation in absolute alcohol is about $(\alpha)_{5461}+47°$, $(\alpha)_D+44°$.

The two lots of crude active *sec.*-octyl hydrogen phthalates

are now separately crystallized twice from acetic acid (about twice its weight of 90 per cent acetic acid should be used for solution in each case). They are thus obtained in an optically pure condition and possess the rotations $(\alpha)_{5461}-58.5°$, $(\alpha)_D-48.4°$ and $(\alpha)_{5461}+58.3°$, $(\alpha)_D+48.4°$, respectively. The amount of pure product, m.p. 75°, obtained in each case is respectively about 99 g. and 96 g. (about 70 per cent of the theoretical amount). The *sec.*-octyl hydrogen phthalate of low optical activity obtained by adding water to the acetic acid filtrates can be collected and used in a subsequent preparation.

Optically pure *l*- and *d-sec.*-octyl alcohols are obtained by distillation in a current of steam of the *sec.*-octyl hydrogen phthalate and 2 moles of sodium hydroxide in 30 per cent solution. The alcohols are practically insoluble in water and are separated, dried with potassium carbonate and distilled. Each boils at 86°/20 mm. and has a rotation $(\alpha)_{5461}^{17°}+11.8°$, $(\alpha)_D^{17°}+9.9°$ or $(\alpha)_{5461}^{17°}-11.8°$, $(\alpha)_D^{17°}-9.9°$. The yields of alcohol from the *sec.*-octyl hydrogen phthalates are about 95 per cent of the calculated amounts.

2. Notes

1. If this temperature is exceeded the yield of octyl phthalate is reduced and the color of the product is very dark. The color is carried through with the *l*-fraction, making it difficult to read rotations.

2. The yield of *sec.*-octyl hydrogen phthalate from the crude *sec.*-octyl alcohol used in this preparation was 61–64 per cent.

3. This product is frequently so dark that a determination of rotation is impossible.

3. Other Methods of Preparation

The resolution of *sec.*-octyl alcohol was first described by Pickard and Kenyon.[1] The method employed by these authors differed from the foregoing in the following respects. The brucine salt of *sec.*-octyl hydrogen phthalate was crystallized several times from acetone until it reached optical purity and was then decom-

posed to give pure *d-sec.*-octyl hydrogen phthalate. The partly laevo-rotatory hydrogen phthalic ester obtained by the decomposition of the more soluble fractions of the brucine salt was then combined with cinchonidine and the cinchonidine salt crystallized some half dozen times from acetone until optical purity was reached. Decomposition of this salt yielded the optically pure *l-sec.*-octyl hydrogen phthalate.

The second and much more convenient procedure given above was described by Kenyon.[2]

[1] J. Chem. Soc. **91**, 2058 (1907).
[2] J. Chem. Soc. **121**, 2540 (1922).

XXII

PHENYL ISOTHIOCYANATE

$$C_6H_5NH_2 + CS_2 + NH_4OH \rightarrow C_6H_5NHCS_2NH_4 + H_2O$$

$$C_6H_5NHCS_2NH_4 + Pb(NO_3)_2 \rightarrow C_6H_5NCS + NH_4NO_3 + HNO_3 + PbS$$

Submitted by F. B. Dains, R. Q. Brewster and C. P. Olander.
Checked by C. S. Marvel and L. T. Sandborn.

1. Procedure

In a 500-cc. round-bottom flask (Note 1) fitted with a mechanical stirrer and surrounded by an ice-salt cooling bath, are placed 54 g. (0.71 mole) of carbon disulfide and 90 cc. (1.3 moles) of concentrated ammonium hydroxide (sp. g. 0.9). The stirrer is started and 56 g. (0.6 mole) of aniline (Note 2) is run into the mixture from a separatory funnel at such a rate that the addition is complete in about twenty minutes. The stirring is continued for thirty minutes after all of the aniline has been added, and then the reaction mixture is allowed to stand for another thirty minutes. During this time a heavy precipitate of ammonium phenyl dithiocarbamate separates and may even stop the stirrer.

The salt is dissolved in 800 cc. of water (Note 3) and transferred to a 5-l. round-bottom flask. To the solution is added with constant stirring a solution of 200 g. of lead nitrate (0.6 mole) in 400 cc. of water. Lead sulfide separates as a heavy brown precipitate which soon turns black. The mixture is then distilled with steam into a receiver containing 5–10 cc. of 1 N sulfuric acid as long as any oil comes over (Note 4). About 2–3 l. of distillate is collected. The product is separated from the water and weighs 63–66 g.

The oil is dried over a little calcium chloride and distilled under reduced pressure. The yield of phenyl isothiocyanate

boiling at 120–121°/35 mm. is 60–63 g. (74–78 per cent of the theoretical amount) (Notes 5 and 6).

2. Notes

1. If the reaction is carried out in a beaker, so much ammonia is lost by volatilization that the crystalline ammonium phenyl dithiocarbamate is not formed. The temperature should be from 0–10° to avoid loss of ammonia.

2. Ordinary technical aniline was used in these experiments.

3. The transfer of the salt to the 5-l. flask is conveniently made by the addition of four successive 200-cc. portions of water to the flask containing the salt.

4. The sulfuric acid is added to react with any ammonia that may be carried over. Otherwise the ammonia may react with the product to give mono- and diphenylthiourea.

5. Larger runs give somewhat lower percentage yields; thus 280 g. of aniline gives about 250 g. (60 per cent of the theoretical amount) of redistilled phenyl isothiocyanate.

6. This reaction is a general method of preparation for aryl isothiocyanates in yields of 50–75 per cent of the theoretical amount.

3. Other Methods of Preparation

Phenyl isothiocyanate has been prepared from thiocarbanilide by the action of phosphorus pentoxide,[1] hydrochloric acid,[2] iodine,[3] phosphoric acid,[4] acetic anhydride,[5] and nitrous acid.[6] It has also been prepared from ammonium phenyl dithiocarbamate by the action of ethyl chlorocarbonate,[7] copper sulfate [8, 10], lead carbonate,[9] lead nitrate,[10] ferrous sulfate,[10] and zinc sulfate.[10]

[1] Jahresber. **1858**, 349.
[2] Z. Chem. **1869**, 589.
[3] Ber. **2**, 453 (1869); J. Russ. Phys. Chem. Soc. **10**, 184 (1878).
[4] Ber. **15**, 985 (1882).
[5] J. Chem. Soc. **59**, 396 (1891).
[6] Monatsh. **27**, 277 (1906).
[7] Monatsh. **33**, 367 (1912).
[8] Ber. **24**, 3021 (1891).
[9] J. prakt. Chem. (2) **65**, 366 (1902).
[10] Univ. Kansas Sci. Bull. **13**, 1 (1922).

XXIII

4-PHENYLSEMICARBAZIDE

$$C_6H_5NHCONH_2 + NH_2NH_2 \cdot H_2O \rightarrow C_6H_5NHCONHNH_2 + NH_3 + H_2O$$

Submitted by A. S. Wheeler.
Checked by C. S. Marvel and M. M. Brubaker.

1. Procedure

In a 500-cc. round-bottom flask fitted with a reflux condenser are placed 68 g. of phenylurea (0.5 mole) (Note 1) and 120 cc. (1 mole) of 42 per cent hydrazine hydrate solution (Note 2). The flask is heated on a steam bath for about twelve hours. The hot mixture is treated with a small amount of decolorizing charcoal (Norite) and filtered. The charcoal is washed with two 15-cc. portions of warm water and the filtrate and washings are then concentrated on a steam bath to about 100 cc. On cooling in an ice bath a crop of crystals separates and is collected on a filter and washed with two 15-cc. portions of cold water. The filtrate and washings are concentrated to about 25 cc. and another crop of crystals is obtained as before. The total yield of crude compound is 47–52 g. It is white at first but sometimes turns brown on drying. It usually melts below 115° because of some unchanged phenylurea.

The product is purified (Note 3) by conversion to the hydrochloride which is then changed into the free base.

A filtered solution of the crude product in 200 cc. of hot absolute alcohol is treated with 250 cc. of concentrated hydrochloric acid. Most of the hydrochloride precipitates at once and is filtered, washed with alcohol and dried. The filtrate is cooled in an ice-salt bath and again filtered, and the precipitate is

washed, dried and added to the previous portion. The yield is 46–48 g. of material melting at about 215° (Note 4). The hydrochloride is dissolved in three times its weight of water, previously heated nearly to boiling (Note 5). The solution is filtered if necessary and then treated with sodium hydroxide solution (2.2 g. of 10 per cent sodium hydroxide solution for each gram of hydrochloride used). The free base separates at once and the solution is cooled in an ice bath and filtered. This product melts at 120–123°. The yield of pure base is 28–30 g. (37–40 per cent of the theoretical amount).

2. *Notes*

1. The phenylurea was prepared as described in Org. Syn. **3**, 95 and melted at 146–147°.

2. An equivalent amount of hydrazine sulfate and sodium hydroxide in 80 per cent alcohol may be used in place of the hydrazine hydrate solution without greatly diminishing the yield.

3. The crude product contains about 9–10 g. of unchanged phenylurea which cannot be satisfactorily removed by crystallization from benzene or water. When the hydrochloride of the phenylsemicarbazide is formed, the phenylurea may be recovered from the alcoholic filtrates.

4. Inasmuch as the melting point of the salt varies somewhat with the rate of heating, this temperature is not particularly significant.

5. The salt should not be boiled with water any longer than is necessary, as some decomposition occurs and diphenylurea, melting at about 235–240°, is produced.

3. Other Methods of Preparation

4-Phenylsemicarbazide has been obtained by the action of hydrazine hydrate on diphenylurea,[1] phenylurethane,[1] phenyl isocyanate,[1] or the potassium salt of dibenzohydroxamic acid.[2] For its preparation, Curtius' method of treating phenylurea with hydrazine hydrate [1] is better than either the older method of

treating acetyl phenylsemicarbazide with sulfuric acid and benzaldehyde and subsequent hydrolysis of the benzal 4-phenylsemicarbazone[3] or the more recent method which involves the hydrolysis of α-benzoyl β-phenylcarbamyl hydrazine.[4]

[1] J. prakt. Chem. (2) **58**, 216 (1898).
[2] Ann. **309**, 193 (1899).
[3] J. prakt. Chem. (2) **53**, 526 (1896).
[4] J. Am. Chem. Soc. **39**, 1333 (1917).

XXIV

QUINIZARIN

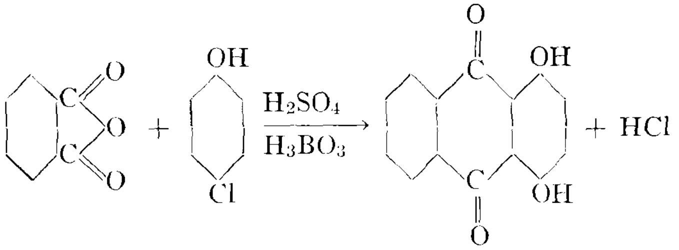

Submitted by L. A. BIGELOW and H. H. REYNOLDS.
Checked by ROGER ADAMS and G. S. HIERS.

1. Procedure

ONE hundred fifteen grams (0.9 mole) of *p*-chlorophenol, 300 g. (2.0 moles) of phthalic anhydride, 50 g. of crystallized boric acid and 2000 g. of 95 per cent sulfuric acid are thoroughly mixed in a 1.5-l. round-bottom flask. The flask is then immersed to the neck in an oil bath and the temperature gradually raised to 200° during the course of one-half to three-quarters of an hour (Note 1). It is then kept constant at 200° for three and one-half hours. Owing to the tendency of the phthalic anhydride to sublime, the mouth of the flask is covered with a piece of porous plate. When cool, the colored melt is poured slowly into 5 l. of cold water with continuous stirring, and filtered. The precipitate is boiled with 10 l. of water and filtered hot to remove the excess of phthalic anhydride which goes into solution. The residue is then suspended in 10 l. of boiling water and to this suspension is added a sufficient quantity of 10 N potassium hydroxide solution to produce a purple color (about 30 cc.), followed by 300 cc. more (Note 2). The alkaline solution is filtered hot, and the resi-

due (about 5–10 g.) washed with 200 cc. of hot 2 per cent potassium hydroxide solution and discarded.

The purple quinizarin solution is next saturated with carbon dioxide and the precipitated quinizarin again filtered. The product is then boiled with 5 l. of a 10 per cent solution of sodium carbonate until it appears black (probably the mono-sodium salt) to dissolve the last traces of purpurin. The mixture is cooled to room temperature, filtered, and the precipitate boiled with 5 l. of 5 per cent hydrochloric acid to liberate the quinizarin. The mixture is again cooled to room temperature and the final product filtered, washed with cold water and dried at 100°.

The yield is 147–160 g. (68–74 per cent of the theoretical amount). It sinters at 190–191° and melts at 199–200° (corr.). A sample twice recrystallized from glacial acetic acid melted at 200–202° (corr.) (Note 3). The crystal form of this product compares very favorably with that of quinizarin of the highest purity, as observed under the microscope.

2. Notes

1. An enameled bucket placed on a Fletcher radial burner serves well for this purpose.

2. The "purple color" end point is not sharp, but as soon as the red hue of the mixture has distinctly changed toward purple, this point is considered reached. A variation of 5–10 cc. either way has little effect, but a large excess gives a large alkali-insoluble residue.

3. Purified quinizarin is reported as melting at 194–195° (*Ber.* **6**, 508 (1873). A melting point of 191–193°, probably uncorrected, is also given (*Ann.* **212**, 13 (1882)).

3. Other Methods of Preparation

Quinizarin has been prepared by heating *p*-chlorophenol, phthalic anhydride, and sulfuric acid; [1] by heating hydroquinone with phthalic anhydride; [2] by heating hydroquinone, phthalic anhydride and c.p. sulfuric acid; [3] by oxidizing anthraquinone

with ammonium persulfate in sulfuric acid solution; [4] by treating anthraquinone and 2-hydroxyanthraquinone with sulfuric and nitric acids in the presence of boric acid; [5] by heating anthraquinone with sulfuric acid in the presence of boric acid to 260–280°; [6] and by chlorination of hydroxy-anthraquinone followed by hydrolysis with sulfuric acid in the presence of boric acid. [7]

[1] Ber. **8**, 152 (1875).
[2] Ber. **6**, 506 (1873).
[3] Ann. **212**, 11 (1882).
[4] J. prakt. Chem. (2) **54**, 90 (1896).
[5] Ger. pat. 81,245, 86,630; Frdl. **4**, 296, 301 (1894–97).
[6] Ger. pat. 81,960; Frdl. **4**, 274 (1894–97).
[7] U. S. pat. 1,504,165 (C. A. **1925**, 77).

XXV

dl-TARTARIC ACID

(By-product, Meso-Tartaric Acid)

$$\begin{array}{l} CHOHCO_2H \\ | \qquad\qquad \cdot H_2O \\ CHOHCO_2H \end{array}$$

Submitted by A. F. Holleman.
Checked by H. T. Clarke and H. J. Bean.

1. Procedure

In a copper or iron kettle of 4-l. capacity is placed a solution of 200 g. of *d*-tartaric acid and 700 g. of sodium hydroxide in 1400 cc. of water. A 12-l. flask through which cold water is run is placed in the mouth of the kettle in order to prevent loss of water vapor, and the mixture is boiled gently over an open flame for four hours. The solution is now transferred to a 12-l. flask or crock and partially neutralized with 1400 cc. of commercial hydrochloric acid (density 1.19). To the still alkaline solution is now added just enough sodium sulfide to precipitate all the iron or copper which has been dissolved from the kettle (Note 1). The filtered solution is then just acidified with hydrochloric acid, boiled to expel all hydrogen sulfide, and made very faintly alkaline to phenolphthalein with sodium hydroxide solution. To the hot solution is then added a concentrated solution of 300 g. of anhydrous calcium chloride which causes an immediate precipitation of calcium *dl*-tartrate and mesotartrate.

The mixture is allowed to stand for a week (Note 2) and the precipitate filtered, washed with cold water until free of chlorides, and dried at 40–50°. The yield is 246–315 g. The product

is found on analysis to consist principally of the tetrahydrate, $C_4H_4O_6Ca \cdot 4H_2O$, (Note 3). It is suspended in 800 cc. of water and treated with the calculated quantity (0.4 g. for every 1.0 g.) of concentrated (95–96 per cent) sulfuric acid. The mixture is warmed on the steam bath, with occasional shaking, or mechanical stirring, for thirty to forty hours (Note 4), filtered hot, and the calcium sulfate washed well with hot distilled water.

The united filtrate is evaporated on the steam bath until the volume amounts to 200 cc., at which point crystals should have already begun to separate from the hot solution. After standing at room temperature for twenty-four hours or longer, the crystals are filtered by suction as free from mother liquor as possible and recrystallized from an equal weight of distilled water (Note 5). The filtrate from this recrystallization is evaporated on the steam bath and the second crop of *dl*-tartaric acid filtered and recrystallized as before. The yield is 65–75 g. (32.5–35.5 per cent of the theoretical amount).

The sirupy filtrate from the *dl*-tartaric acid, which consists principally of meso-tartaric acid together with a small amount of unchanged *d*-tartaric acid, is diluted with its own volume of water and divided into two equal parts; one part is exactly neutralized with potassium hydroxide, using phenolphthalein, and the second part is added. After standing for twenty-four hours the potassium hydrogen *d*-tartrate is filtered off. The filtrate is neutralized with ammonia, then just acidified with acetic acid, and treated with an excess of calcium chloride solution (about 500 cc. of a 25 per cent solution). After standing for a week (Note 2) the precipitated calcium meso-tartrate is filtered and washed with cold distilled water. It may, if desired, be recrystallized from boiling water. The yield is 42–55 g. (corresponding to 14–18 per cent of the original *d*-tartaric acid). The sirupy free acid may be prepared from this salt by treatment with sulfuric acid as above.

2. Notes

1. If iron is not removed at this point it separates with the calcium salt and contaminates the final product. If desired,

copper can be removed at a later stage by passing hydrogen sulfide through the acid solution.

2. The calcium salts, in particular that of meso-tartaric acid, separate very slowly, and the yield is appreciably lower if the mixture is allowed to stand only eighteen hours.

3. The calcium salt of the principal product, *dl*-tartaric acid, crystallizes with four molecules of water, while the secondary product, meso-tartaric acid, forms a calcium salt which crystallizes with three molecules of water. The amount of sulfuric acid actually required may readily be calculated from the percentage of calcium found on analysis in the regular way; or it may be estimated by igniting a sample, and titrating the residue with standard acid.

4. This long treatment is necessary since, on the one hand, the calcium salts tend to be protected by the calcium sulfate which crystallizes on them, and on the other hand, it is important to allow all the free sulfuric acid to react.

5. A very complete separation of the calcium sulfate may be effected by adding to the concentrated solution 1000 cc. of alcohol, allowing the mixture to stand for 24 hours, and filtering. The alcohol is then distilled from the filtrate and the procedure followed as indicated above.

3. Other Methods of Preparation

The most practical method for preparing *dl*-tartaric acid consists in the racemization of *d*-tartaric acid. This was first accomplished by Pasteur [1] by heating cinchonine *d*-tartrate; it can also be brought about (though with poor yield) by boiling with dilute mineral acids,[2] or with water,[3] or by heating the acid to 170–180°.[3] A better yield is obtained by heating *d*-tartaric acid to 175° with a small amount of water,[4] or by boiling with a large excess of concentrated alkali.[5]

dl-Tartaric acid has been produced synthetically by a variety of methods, the most interesting of which is the oxidation of fumaric acid; [6] maleic acid on oxidation yields meso-tartaric

acid[7] which is always formed as a by-product during the racemization of tartaric acid.

[1] Jahresber. **1853**, 422.
[2] Jahresber. **1856**, 463; Rec. trav. chim. **17**, 65 (1898).
[3] Bull. soc. chim. **5**, 355 (1863).
[4] Compt. rend. **75**, 439 (1872); Bull. soc. chim. (2) **18**, 201 (1872).
[5] Ber. **30**, 1574 (1897); Rec. trav. chim. **17**, 65 (1898).
[6] Ber. **13**, 2150 (1880); **46**, 1667 (1913); J. Am. Chem. Soc. **47**, 1412 (1925).
[7] Ber. **14**, 713 (1881); **46**, 1667 (1913); J. Am. Chem. Soc. **47**, 1412 (1925).

XXVI

THIOPHOSGENE

$$2CS_2 + 5Cl_2 \rightarrow 2CSCl_4 + S_2Cl_2$$

$$2S_2Cl_2 + 2H_2O \rightarrow SO_2 + 3S + 4HCl$$

$$CSCl_4 + 2H \rightarrow CSCl_2 + 2HCl$$

Submitted by G. Malcolm Dyson.
Checked by Frank C. Whitmore and A. M. Griswold.

1. Procedure

A. *Preparation of Thiocarbonyl Perchloride.*—In a 5-l. bottle arranged for cooling by running water is placed 500 g. (6.58 moles) of dry carbon disulfide (Note 1) to which 0.5 g. of iodine has been added. Dry chlorine is passed into the cooled carbon disulfide at such a rate that the temperature does not rise above 25°, until the liquid weighs 1770 g. (17.9 moles chlorine) (Note 2). The time required is about forty hours. The product is a deep red liquid, a mixture of impure thiocarbonyl perchloride and sulfur chloride.

The apparatus illustrated in Fig. 3 is assembled, in a large hood if possible (Note 3). *A* is a 5-l. round-bottom flask heated by a large ring burner and provided with a specially treated four-hole cork stopper covered with tin foil (Note 4). To these holes are fitted the column *D*, the tube *B* reaching to the bottom of *A*, the specially bent tube *C* reaching up the inside of *D*, and the tube *K* connected with the tubes leading to the 2-l. separatory funnel *H*, so that the distance between the stopper of *A* and the stopcock of *H* is at least 100 cm. The bottom of the column *D* is of 20 mm. bore while the main portion is 30 mm. The side arm should be at least 85 cm. above the stopper of *A*. The tube *C*

should reach about half way up the inside of the column *D*. The column is filled with pieces of 3-mm. glass tubing about 5 mm. long. Its top is provided with a cork covered with tin foil and fitted fairly loosely so as to blow out in case of a clogging of the apparatus. It should be held by a wire to prevent its being blown out entirely. Tubes *B* and *C* are connected with a steam line or steam generator of large capacity. The separatory funnel

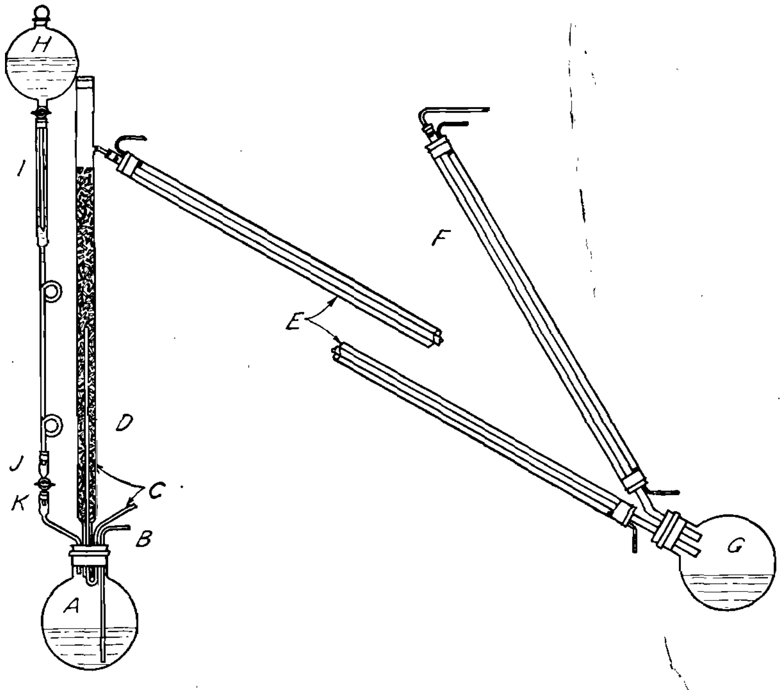

FIG. 3.

H is placed at the highest available level (Note 5) and connected with the tubes *I*, *J*, and *K* in such a manner as to secure a pressure of liquid sufficient to more than balance the steam pressure (Note 6). *E* and *F* are specially constructed condensers of unusual length (160 cm. and 85 cm., respectively) and bore (40 mm.) made from large glass tubing and rubber stoppers (Note 7). The top of condenser *F* is connected to à good draft chamber.

G is a 5-l. or better, a 12-l. round-bottom flask which is used as a receiver.

The crude chlorinated mixture is steam-distilled in the special apparatus to obtain thiocarbonyl perchloride and to decompose the sulfur chloride. In flask *A* is placed 1200 cc. of water which is heated to boiling by means of the ring burner. Steam is passed in through tubes *B* and *C*. The chlorinated mixture is placed in the separatory funnel *H* and the connecting tubes are filled with the liquid which is allowed to pass into *A* at about 5 drops per second (Note 8). Sulfur begins to separate in the column and in the condensers. The steam distillation requires about five hours and gives 10–12 l. of distillate consisting of water, sulfur and a heavy red oil. The water is decanted and the rest of the mixture is filtered by suction through glass wool. The oil is separated and dried over about 10 g. of calcium chloride.

The crude, dry thiocarbonyl perchloride is distilled through an efficient 60-cm. column (Note 9). The distillate below 140° is discarded. The fraction boiling at 140–155° at atmospheric pressure amounts to about 600 g. The boiling point of pure thiocarbonyl perchloride is 149°.

B. *Reduction of Thiocarbonyl Perchloride to Thiophosgene.*—The apparatus illustrated in Fig. 4 is assembled. A is a 5-l. round-bottom flask heated by a ring burner and provided with a two-hole, specially treated cork (Note 4) carrying tube *B* of about 40 cm. length connected with condenser *C* of about 115 cm. length, and tube *R* which conveys the perchloride from the separatory funnel *T* (Note 6). *R* is 6 mm. tubing of about 90 cm. length and must reach to the bottom of *A*. *D* and *G* are specially blown connecting tubes, *D* reaching through the cork of *F* and *G* reaching to the bottom of the 5-l. flask, *F*. Each arm of *D* is about 20 cm. long and 2 cm. bore. The vertical arm of *G* is of about 3 cm. bore and its side arm of about 1 cm. bore. *H* and *I* are efficient bulb condensers at least 60 cm. long. *F* is provided with siphon *E* for removing the product. *L* is a tall calcium chloride tower (about 50 cm. in length) packed with short pieces of glass tubing with layers of glass wool. Its stopper carries the tube *K* reaching to the bottom of the tower, a

separatory funnel, and an exit tube *M* leading to the draft. *P* is a siphon for removing the xylene wash liquid.

In the flask *A* are placed 750 g. (6.3 moles) of granulated tin (Note 10) and 1500 cc. of commercial hydrochloric acid (about 28 per cent). The mixture is heated until the action is vigorous. The thiocarbonyl perchloride is run in from the funnel *T* (Note 11). The resulting reaction is very violent. The vapors are

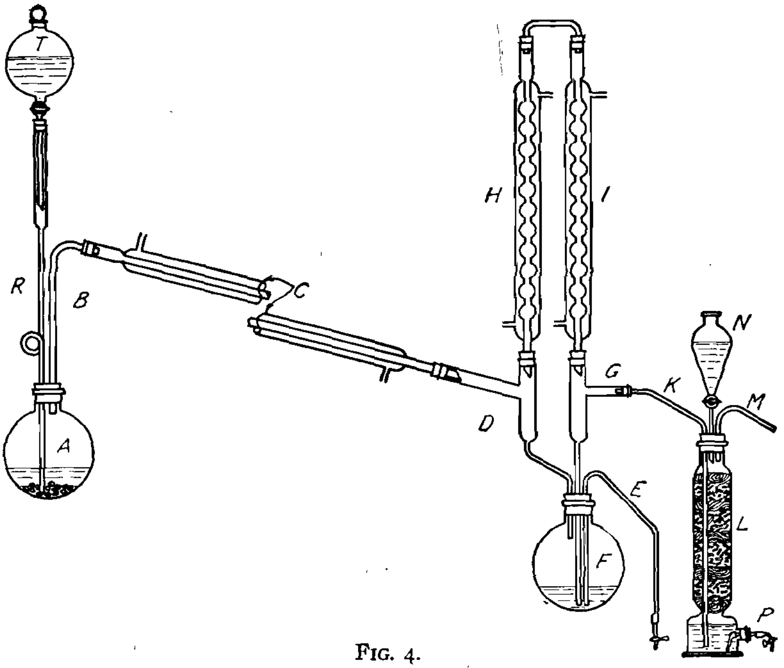

FIG. 4.

condensed in the series of condensers and in the scrubber *L* through which xylene is allowed to flow slowly from the separatory funnel *N*. Most of the crude thiophosgene collects in *F*, although a small amount is obtained from the distillation of the xylene wash liquid.

The crude thiophosgene is separated and dried with about 10 g. of calcium chloride, and fractionated with a good column. Very little distils below 73°. The fraction boiling at 73–76° at atmospheric pressure is pure thiophosgene and amounts to about

180 g. (24 per cent of the theoretical amount) (Note 12). The fraction above 76° is unchanged thiocarbonyl perchloride and may be again reduced or added to the reduction in a subsequent run.

2. Notes

1. Ordinary commercial carbon disulfide was used after drying over calcium chloride.

2. Any great excess of chlorine should be avoided as it favors the formation of carbon tetrachloride. Practically as good yields have been obtained by using only about three-quarters the amount of chlorine indicated.

3. The vapors formed in the experiment are very objectionable. It is even advisable to transfer the liquids from one vessel to another by suction rather than by pouring in order to avoid the irritating and lachrymatory effects of the vapors.

4. It is advisable to saturate all corks with sodium silicate solution after fitting and boring them (p. 3, Note 1). They are then covered with lead foil, wired in, and coated with shellac.

5. As long a column of liquid as possible is used to overcome the tendency for steam to work back up the inlet tube. If this happens, the sulfur formed is likely to clog the tube. This can be avoided by proper manipulation of the stopcock *J*.

6. The backing of steam up the inlet tube is one of the most serious difficulties in the experiment. This can be avoided if the tube *I* (Fig. 3) is once filled with the perchloride.

7. No ordinary condenser was found sufficiently effective to condense the vapors and not be clogged by the sulfur. The specially constructed wide condensers are absolutely necessary.

8. If the addition is much more rapid than this, the sulfur chloride is not all decomposed.

9. The distillation of the crude perchloride is necessary to remove carbon tetrachloride and other low-boiling impurities which could not later be separated from the thiophosgene by distillation.

10. The tin used should be in fairly large granules, otherwise the reaction is likely to become too violent. In general, the

faster the reduction the better the yield of thiophosgene. In a few cases yields of 50–60 per cent have been obtained.

11. The time of addition of the perchloride should be made as short as possible consistent with safety. In runs with the above amounts of materials, the time of the addition was about ten minutes. It may again be emphasized that the yield depends largely on the skill of the operator in running the reduction as rapidly as possible.

12. As has been stated, larger yields are occasionally obtained but they cannot be depended on.

3. Other Methods of Preparation

Thiophosgene has been prepared in small yield by the chlorination of carbon disulfide in the presence of iodine [1] and by the reduction of thiocarbonyl perchloride.[2]

[1] Ber. **3**, 858 (1870).

[2] Ber. **20**, 2376 (1887); J. Am. Chem. Soc. **38**, 1551 (1916); J. Soc. Chem. Ind. **39**, 256 (1920). Gazz. chim. ital. **53**, 175 (1923); **54**, 251 (1924).

XXVII

THYMOQUINONE

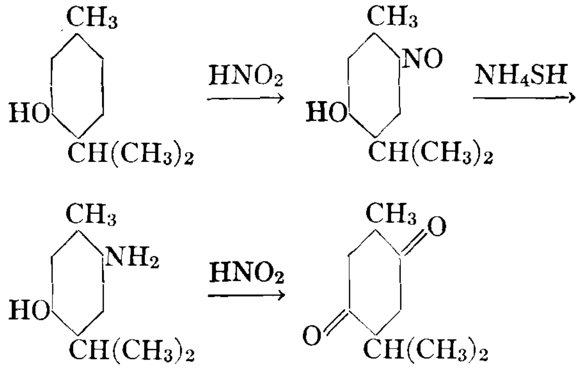

Submitted by EDWARD KREMERS, NELLIE WAKEMAN and R. M. HIXON.
Checked by H. T. CLARKE and C. R. NOLLER.

1. Procedure

A. *Nitrosothymol.*—To a solution of 100 g. (0.666 mole) of thymol in 500 cc. of 95 per cent ethyl alcohol is added 500 cc. of concentrated hydrochloric acid. This mixture is cooled to 0° in a 2-l. beaker set in an ice-salt bath, and to it is added 72 g. (1 mole) of commercial sodium nitrite in portions of about 5 g. each.

The mixture is stirred well after each addition (Note 1). The solution first becomes brown in color, and a green precipitate soon begins to form. After 35 g. of nitrite has been added, the mixture becomes pasty; the intervals between the additions must now be lengthened and the stirring made more vigorous. When all has been added, the bulk of the product is transferred to

a 12-l. flask containing 8 l. of cold water, and the remainder washed in with water. The product, after agitation with water, is now a light-yellow, fluffy solid; it is filtered off by suction and washed well with water (Note 2).

B. *Aminothymol.*—The crude, wet nitrosothymol so obtained is worked up with a mixture of 900 cc. of 28 per cent ammonia water (sp. g. 0.90) and 1600 cc. of water; the brown solution is filtered free of a little resinous matter, and hydrogen sulfide is passed into it. The brown color disappears and a white precipitate of aminothymol forms. The passage of hydrogen sulfide is continued for thirty minutes longer (Note 3), when the base is filtered and washed well with cold water, contact with air being avoided as far as possible (Note 4).

C. *Thymoquinone.*—The wet aminothymol thus prepared is immediately dissolved in 110 cc. of concentrated sulfuric acid diluted to 4 l. and contained in a 12-l. flask. To this solution is added 150 g. of sodium nitrite (2.18 moles), in 5–10-g. portions, with shaking after each addition. The resulting mixture is heated to 60° on a steam bath, with occasional shaking, for half an hour (Note 5), and is then distilled in a current of steam, by means of the apparatus described in Org. Syn. **2,** 80 (Note 6). All the thymoquinone passes over with the first 3 l. of distillate; it solidifies on cooling, and is filtered with suction (Note 7), washed, and dried at room temperature. The yield is 80–87 g. (73–80 per cent of the theoretical amount) of bright yellow crystals, melting at 43–45° (Note 8).

2. Notes

1. No nitrous acid escapes from the mixture, since it is converted into ethyl nitrite which in turn reacts with the thymol.

2. The crude nitrosothymol may be purified by drying and subsequent recrystallization from 2 l. of benzene, from which it separates as a pale yellow solid, melting at 160–164°. A small second crop is obtained on concentrating the mother liquor,

which contains in addition an orange-colored resinous impurity. The yield is 103 g. (87 per cent of the theoretical amount).

3. If the base is filtered off without passing in the excess of hydrogen sulfide, it immediately assumes a purple color on exposure to air.

4. The free base tends to become oxidized in the air but may be preserved as the hydrochloride. This is prepared by transferring it as soon as possible to 1500 cc. of distilled water containing 100 cc. of concentrated hydrochloric acid. The sparingly soluble hydrochloride separates at once. It is recrystallized from the mixture with the use of a little decolorizing carbon, whereupon it separates as colorless needles. A further crop is obtained on concentrating the mother liquor under reduced pressure to about 200 cc. The yield is 110 g. (82.1 per cent of the theoretical amount).

5. The greater part of the oxides of nitrogen escapes during this treatment; the small amount that passes over with the thymoquinone does not harm the product.

6. If an ordinary condenser is employed for the steam distillation, care must be taken that the distilled product does not crystallize in the condenser tube and clog it.

7. The watery filtrate contains about 0.5 g. of dissolved thymoquinone; this can be recovered by distilling over 500 cc. of it and filtering the distillate.

8. The melting point is not appreciably raised by recrystallization from petroleum ether (b.p. 60–80°).

3. Other Methods of Preparation

Thymoquinone has been prepared directly from thymol by sulfonating and oxidizing the sulfonation mixture with manganese dioxide [1] or potassium dichromate; [2] the same process has been successfully applied to carvacrol.[3] The oxidation of salts of aminothymol with dichromate,[4] ferric chloride,[5] or nascent bromine [6] also leads to satisfactory yields of thymoquinone. The above procedure is based on the observation [7] that the diazonium salt obtained from aminothymol is almost quantitatively con-

verted into thymoquinone on warming in presence of excess of nitrous acid.

[1] Ann. **101**, 120 (1857).
[2] Pharm. Rev. **26**, 329 (1909) (Chem. Zentr. **1910**, I, 24).
[3] J. prakt. Chem. (2) **15**, 410 (1877); Bull. soc. chim. (3) **7**, 34 (1892).
[4] Ber. **18**, 3194 (1885).
[5] Ber. **10**, 297 (1877); Ann. **279**, 371 (1894).
[6] J. prakt. Chem. (2) **23**, 172 (1881).
[7] Ann. **279**, 371 (1894); Pharm. Rev. **26**, 364 (1909) (Chem. Zentr. **1910**, I, 24).

XXVIII

TRIMETHYLGALLIC ACID

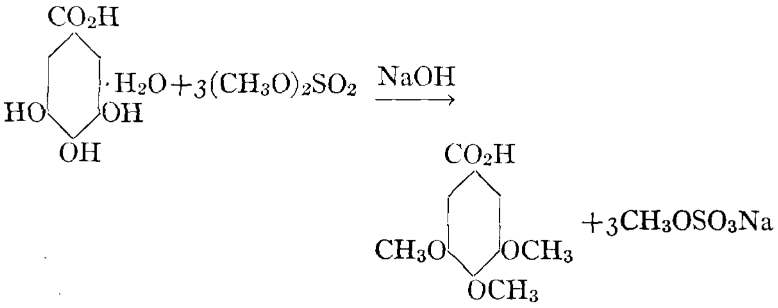

Submitted by F. Mauthner.
Checked by H. T. Clarke.

1. Procedure

To a cold solution of 80 g. (2 moles) of sodium hydroxide in 500 cc. of water in a 1-l. flask is added 50 g. (0.266 mole) of gallic acid. The flask is immediately tightly stoppered (Note 1), and the mixture shaken occasionally until all the acid has dissolved; 89 g. (67 cc.) of methyl sulfate (0.71 mole) is then added (Note 2) and the flask is shaken for twenty minutes, being cooled by means of cold water in order that the temperature does not rise above 30–35°. Occasionally the stopper is raised to release any pressure. A second portion of 89 g. of methyl sulfate is then added and shaking continued for ten minutes longer. During this second addition the temperature may rise to 40–45°.

The flask is then fitted with a reflux condenser and the contents boiled for two hours. In order to saponify the small amount of ester which is produced, a solution of 20 g. of sodium hydroxide in 30 cc. of water is then added and boiling continued

for two additional hours. The reaction mixture is then cooled and acidified with dilute hydrochloric acid; the precipitated trimethylgallic acid is filtered with suction and washed well with cold water. The product, which melts at 157–160°, is sufficiently pure for many purposes. It weighs 50–52 g. (89–92 per cent of the theoretical amount). It may be purified by recrystallization from 2 l. of boiling water with the use of decolorizing carbon, the filtration being carried out in a steam-jacketed funnel. In this way 41–43 g. (Note 3) of colorless needles melting at 167° is obtained.

2. Notes

1. *The alkaline solution immediately darkens somewhat*, owing to the presence of dissolved air; further oxidation must be limited by preventing access of air to the mixture. This is particularly necessary during the early stages; with increasing methylation the tendency to absorb oxygen falls off rapidly.

Access of air may be prevented in an apparatus that permits of mechanical stirring. For this purpose a three-necked flask is provided with a mechanical stirrer, separatory funnel and Bunsen valve. The valve is made by cutting a vertical slit in a piece of rubber tubing, closed at one end by a solid glass plug or pinchcock and attached at the other end to a piece of glass tubing contained in a stopper. Such a valve acts in one direction, permitting release of gas pressure.

2. The toxic nature of methyl sulfate vapor must always be borne in mind.

3. A further quantity can be recovered by concentrating the mother liquor. The residue of decolorizing carbon is also likely to contain an appreciable proportion of trimethylgallic acid, which can be extracted by boiling it with the mother liquor.

3. Other Methods of Preparation

Trimethylgallic acid is most conveniently prepared by methylating gallic acid with methyl sulfate.[1] It has also been obtained

by methylating methyl gallate and saponifying the product,[2] and by the oxidation of various natural products.[3] It has been found in nature.[4]

[1] Ann. **349**, 219 (1905); J. Chem. Soc. **89** 1655 (1906); **111**, 7 (1917); Ber. **45**, 2718 (1912); J. Am. Chem. Soc. **36**, 517 (1914).

[2] Ber. **21**, 2022 (1888).

[3] Ber. **34**, 3009 (1901); **41**, 1771 (1908).

[4] J. Chem. Soc. **95**, 253 (1909).

XXIX

TRIMYRISTIN

Ether Extraction of Nutmegs →
$CH_2(OCOC_{13}H_{27})CH(OCOC_{13}H_{27})CH_2(OCOC_{13}H_{27})$

Submitted by G. D. BEAL.
Checked by H. T. CLARKE and E. R. TAYLOR.

1. Procedure

IN the container *A* (Fig. 5)* is placed 1500 g. of crushed nutmegs (Note 1) moistened with ether (Note 2). *A* is a 3-l. inverted aspirator bottle connected by a 3-mm. glass tube to the efficient condenser *C*, and by 3-mm. tubing, one end of which is provided with a cotton filter, to the 2-l. round-bottom flask *B*. Flask *B* is connected by 3-mm. tubing of 75 cm. length to *C*. In *B* are placed 500 cc. of ether and a few chips of clay plate to prevent superheating. *B* is then heated on a steam cone so that the ether boils rapidly enough to reach the condenser *C* and to flow back through *A*.

The extraction with ether is continued until the ether leaving the insoluble solid is entirely colorless. This requires twenty-four to seventy-two hours, according to the state of subdivision of the nutmegs and the rate at which the ether is passed through. The ethereal solution is then freed of a small quantity of entrained insoluble matter by filtering through a folded paper. This filtration may advantageously be completed in the type of extractor described in Org. Syn. **2**, 49. The clear solution is now entirely freed from ether by distillation on the water bath. The residue weighs 640–690 g. On cooling it sets to a mass of crystals of trimyristin which is filtered with

* This modified Soxhlet extractor was devised by D. F. McFarland.

suction (Note 3) and washed with 225 cc. of cold 95 per cent ethyl alcohol in small portions. The product is now recrystallized from 3.5 l. of 95 per cent ethyl alcohol; it is stirred mechanically during cooling since the trimyristin tends to separate as an oil at the outset (Note 4). The crystallized trimyristin is then filtered off by suction and washed with 350–400 cc. of 95 per cent alcohol in small portions. The crystals, which are colorless and practically odorless, melt at 54–55°. The yield is 330–364 g.

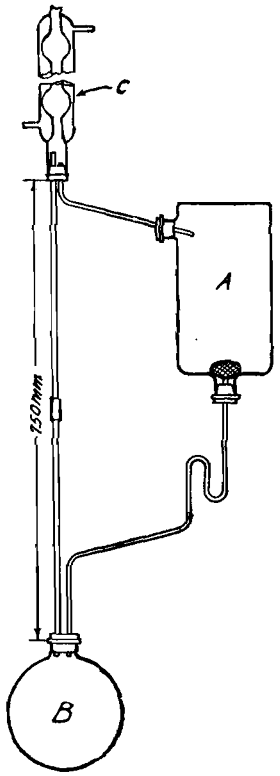

FIG. 5.

2. Notes

1. If the nutmegs be crushed to No. 40 powder, as recommended by the authors, the extraction is complete in twenty-four to forty-eight hours; in checking it was found more convenient merely to pass the nutmegs through a food chopper (whereby they were broken up into pieces the largest of which were 3–4 mm. across), when the extraction required sixty-six to seventy-two hours for completion.

If nutmeg butter, a commercial fat obtained by the hot pressing of ground nutmegs, is available, the above extraction may be omitted. The only operation necessary is a double crystallization of the crude material from boiling 95 per cent alcohol. Since nutmeg butter is frequently adulterated with foreign fats, the purity of the product should be checked by the saponification number (232 for pure trimyristin).

2. The nutmeg must first be moistened with ether, otherwise the extraction takes much longer. The author has found this apparatus to be generally satisfactory for the extraction of vegetable drugs with volatile solvents.

3. The filtrate from the crude trimyristin contains the odorous oils of the nutmeg. A further quantity of trimyristin may be obtained from it by distilling with steam and recrystallizing the non-volatile residue twice from alcohol; but the amount is not commensurate with the trouble, and this operation is not advised unless the residues from at least 5000 g. of nutmegs are on hand.

4. The alcohol may be distilled from the mother liquor of the recrystallization. The residue from this distillation may be added to the mother liquor of the first crystallization, which is then concentrated to the crystallization point. The crop of crystals thus obtained will usually require double recrystallization. Alcohol recovered from the first mother liquor will contain too much volatile oil of nutmeg to be used for other purposes.

3. Other Methods of Preparation

The only convenient source of trimyristin is nutmegs, and ether is the most suitable solvent for its extraction.[1] It has also been prepared from glycerol and myristic acid.[2]

[1] Ann. **37**, 152 (1841); **202**, 172 (1880); J. Chem. Soc. **93**, 1653 (1908). *Cf.* Ber. **12**, 1668 (1879).

[2] Rec. trav. chim. **18**, 197 (1899).

ADDITIONS AND CORRECTIONS FOR PRECEDING VOLUMES

(The numbers in parenthesis following the name of a compound refer to the volume and page of Organic Syntheses.)

Allyl alcohol (1, 15).—When the crude allyl alcohol is distilled from a steam bath under reduced pressure, the distillate is considerably richer in allyl alcohol (sometimes up to 90 per cent) than according to the original directions. The strength can be readily determined by measuring the specific gravity and comparing with the following figures:

Per cent allyl alcohol..	65	70	75	80	85	90	95	100
Density at 20°........	.920	.911	.902	.893	.884	.875	.865	.854

The best results are obtained when working at a pressure of 200-300 mm. Some boiling points of the watery alcohol are: 60°/200 mm., 70°/300 mm. and 78°/500 mm.

Benzoin (1, 33).—The reaction sometimes takes place with considerable violence and material may be lost through the condenser. Accordingly a somewhat larger flask is generally desirable or the upper end of the reflux condenser is provided with a wide tube leading to an empty flask. (Private communication by several.)

p-Bromophenol (1, 39).—Line 12 on page 42 should read: "*Holleman and Rinkes*[7] have recently studied the bromination, etc."

9, 10-Dibromoanthracene (3, 41).—When recrystallized from xylene, samples have been obtained that melt as high as 226° (uncorr.). E. de Barry Barnett (private communication).

Furfural (1, 49).—The low yield of furfural from straw and other materials makes it desirable to extract the aqueous furfural distillate after acid hydrolysis by a solvent heavier than

water, such as chloroform. This is done by adding a funnel to the end of the condenser so that the distillate passes directly into a layer of chloroform contained in a receiver. Distillation is continued until the chloroform layer does not increase. The furfural is obtained by distillation of the chloroform layer, and practically all of the chloroform is recovered. From the laboratory of H. I. Waterman (private communication).

Methylene iodide (1, 57).—The methylene iodide obtained after vacuum distillation melts at 6°.

p-Nitrobenzoyl chloride (3, 75).—*p*-Nitrobenzoic acid is heated under reflux with an excess of thionyl chloride. After the excess thionyl chloride has been distilled at atmospheric pressure, the *p*-nitrobenzoyl chloride is distilled under reduced pressure. Excellent results are reported by Joseph Kenyon (private communication).

LATER REFERENCES TO PREPARATIONS IN PRECEDING VOLUMES

(The following references are to methods of preparative value that have been described up to 1926. The numbers in parenthesis following the name of a compound refer to the volume and page of Organic Syntheses.)

Acetal (3, 1):

(*a*) By passing acetylene into alcohol containing sulfuric acid and mercuric sulfate. REICHERT, BAILEY and NIEUWLAND, J. Am. Chem. Soc. **45**, 1552 (1923).

(*b*) A general method for preparing acetals by treating aldehydes or ketones with the appropriate tetra-alkyl silicate, using dry hydrogen chloride as the catalyst. HELFERICH and HAUSEN, Ber. **57**, 795 (1924).

Allyl alcohol (1, 15):

From oxalic acid and glycerol. COFFEY and WARD, J. Chem. Soc. **119**, 1301 (1921).

Benzalacetone (3, 17):

By a modified Claisen condensation. LEWINSOHN, Perfumery Essent. Oil Record **15**, 118 (1924) (C. A. **1924**, 2222).

Benzalacetophenone (2, 1):

From benzaldehyde, acetophenone, and hydrogen chloride in glacial acetic acid. STRAUS and GRINDEL, Ann. **439**, 276 (1924).

Benzoic anhydride (3, 21):

From benzoic acid and acetic anhydride. AUTENRIETH and THOMAE, Ber. **57**, 431 (1924).

Cyclohexene (5, 33):

From cyclohexanol and a small amount of sulfuric acid. SENDERENS, Compt. rend. **177**, 1183 (1923).

Cyclohexene oxide (5, 35):

From chlorocyclohexanol and alkalies. GODCHOT and BEDOS, Bull. soc. chim. (4), **37**, 1454 (1925).

Diacetone alcohol (1, 45):

(*a*) From acetone and sodium hydroxide. LOCQUIN, Ann. chim. (9), **19**, 32 (1923).

(*b*) From acetone and lime. EDMONDS, U. S. pat. 1,550,792 (1925) (C. A. **1926**, 51).

Ethyl cyanoacetate (3, 53):

From ethyl chloroacetate and sodium cyanide, and by esterifying cyanoacetic acid. STEPHENS, J. Soc. Chem. Ind. **43**, 313T, 327T (1924).

Ethyl oxalate (2, 22, and 5, 59):

By passing vapors of ethyl alcohol through oxalic acid. DUTT, J. Chem. Soc. **123**, 2714 (1923).

Furfural (1, 49):

(*a*) From cellulose. RICARD, U. S. pat. 1,322,054 (1919) (C. A. **1920**, 284); Can. pat. 220,474 (1922) (C. A. **1922**, 2868). CLAASEN, Ger. pat. 376, 418 (1923) (Chem. Zentr. **1923**, II, 540).

(*b*) From rice. SCURTI and ZAY, J. Soc. Chem. Ind. **39**, 441A (1920).

(c) From corncobs. LA FORGE, J. Ind. Eng. Chem. **13**, 1024 (1921); **15**, 499 (1923). LA FORGE and MAINS, Ind. Eng. Chem. **15**, 1057 (1923); **16**, 356 (1924).

(*d*) From acetylene, water and iron. STEUER and GROB, U. S. pat. 1,421,743 (1922) (C. A. **1922**, 3093).

(*e*) From xylan. HEUSER and SCHERER, Brennstoff-Chemie, **4**, 97 (1923) (Chem. Zentr. **1923**, I, 1489).

(*f*) From pentosan in wood. GIERISCH, Cellulosechemie, **6**, 61 (1925) (Chem. Zentr. **1925**, II, 1822).

(*g*) Reviews of preparation and properties. MONROE, J. Ind. Eng. Chem. **13**, 133 (1921); MINER, TRICKEY and BROWNLEE, Chem. Met. Eng. **27**, 299, 362 (1922); ZEPF, Die Metallbörse **13**, 1227 (1923) (Chem. Zentr. **1923**, II, 945); VAN OS, Chem.

Weekblad, **22**, 18 (1925) (Chem. Zentr. **1925**, I, 1076); "Furfural and its Derivatives," Miner Laboratories, Chicago, Ill., Bull. 2, Sept., 1925.

Mesityl oxide (1, 53):

(*a*) From diacetone alcohol and hydrochloric acid. HOFFMAN, U. S. pat. 1,474,035 (1923) (C. A. **1924**, 401).

(*b*) From diacetone alcohol and oxalic acid. LOCQUIN, Ann. chim. (9) **19**, 32 (1923).

Methylamine (3, 67):

(*a*) From acetamide and bleaching powder. BADER and NIGHTINGALE, U. S. pat. 1,489,380 (C. A. **1924**, 1836).

(*b*) Purified through its benzal derivative. SOMMELET, Compt. rend. **178**, 217 (1924). (This method has been checked and found satisfactory by one of the editors.)

Methylene iodide (1, 57):

From methylene chloride and potassium iodide. PERKIN and SCARBOROUGH, J. Chem. Soc. **119**, 1400 (1921).

Nicotinic acid (4, 49):

Essentially the method given in Organic Syntheses. McELVAIN and ADAMS, J. Am. Chem. Soc. **45**, 2738 (1923).

p-Nitrobenzoic acid (2, 53):

(*a*) By electrolytic oxidation of *p*-nitrotoluene. DUNBROOK and LOWY, Trans. Am. Electrochem. Soc. **45** (pre-print) (1924) (C. A. **1924**, 1088).

(*b*) From oxidation of *p*-nitrotoluene by nitric acid. LLOYD and GERSHON, U. S. pat. 1,458,715 (C. A. **1923**, 2587).

n-Propylbenzene (4, 59):

From benzylmagnesium chloride and ethyl *p*-toluenesulfonate. GILMAN and BEABER, J. Am. Chem. Soc. **47**, 518 (1925).

o-Tolunitrile and p-Tolunitrile (4, 69):

Essentially the method given in Organic Syntheses. CLARKE and READ, J. Am. Chem. Soc. **46**, 1001 (1924).

Trimethylamine (1, 75):

From ammonia, formaldehyde and formic acid. SOMMELET and FERRAND, Bull. soc. chim. (4) **35**, 446 (1924). (This method has been checked by one of the editors and is highly recommended.)

Trimethylene bromide (1, 8):

From trimethylene glycol and hydrogen bromide. KAMM and NEWCOMB, J. Am. Chem. Soc. **43**, 2228 (1922).

Trimethylamine hydrochloride (1, 79):

(*a*) From ammonium chloride and methyl alcohol. TURNER and HOWALD, J. Am. Chem. Soc. **42**, 2663 (1920).

(*b*) From ammonia and methyl alcohol with a catalyst. BROWN and REID, J. Phys. Chem. **28**, 1067 (1921).

Triphenylmethane (4, 81):

Essentially the method given in Organic Syntheses. NORRIS and YOUNG, J. Am. Chem. Soc. **46**, 2580 (1924).

AUTHOR INDEX

(This index comprises names from all volumes of this series. The numbers after each name refer to a volume and page of Organic Syntheses.)

Adams, A. B. **5**, 15, 31, 33, 35, 59, 83
Adams, C. E. **5**, 79
Adams, E. W. **5**, 87
Adkins, Homer **3**, 1; **6**, 1
Allen, C. F. H. **3**, 53; **6**, 32.
Allen, Paul, Jr. **2**, 89; **3**, 17
Alvarado, A. M. **3**, 3
Armendt, B. F. **5**, 85

Barrett, E. R. **2**, 67
Beaber, N. J. **6**, 32
Beal, G. D. **6**, 66, 100
Bean, H. J. **6**, 82
Bere, C. M. **5**, 1
Bigelow, L. A. **5**, 21; **6**, 16, 78
Bills, C. E. **1**, 25, 29, 33
Bircher, L. J. **5**, 93
Bishop, J. H. **2**, 75; **3**, 1, 7, 11, 83.
Blanchard, K. C. **3**, 95
Bogert, Marston T. **5**, 13
Bourguel, M. **5**, 49; **6**, 20, 26
Bramann, G. M. **5**, 15
Brethen, M. R. **3**, 25, 51, 79; **5**, 75; **6**, 64
Brewster, R. Q. **6**, 72.
Broderick, A. E. **5**, 21
Brown, B. K. **1**, 75; **2**, 37
Brubaker, M. M. **4**, 29, 69, 77; **5**, 93; **6**, 20, 26, 58, 74
Burnett, W. B. **2**, 23

Calvery, H. O. **2**, 57, 59; **3**, 47, 53; **4**, 35, 59
Caudle, E. C. **3**, 45
Chadwell, H. M. **2**, 1
Cheetham, H. C. **3**, 13
Chemical Laboratory, Picatinny Arsenal **4**, 53
Chiles, H. M. **5**, 5, 53, 63
Christiansen, W. G. **4**, 65
Coleman, G. H. **2**, 17, 71; **3**, 3; **5**, 31, 33
Coleman, Gerald H. **6**, 6
Converse, S. **6**, 32
Corson, B. B. **3**, 7; **4**, 49; **6**, 58
Cox, G. J. **5**, 63
Cramer, P. L. **6**, 18

Dains, F. B. **6**, 72
Dakin, H. D. **3**, 27
Davis, Anne W. **1**, 1, 67; **2**, 23, 79
Davis, J. B. **2**, 47
Davis, Tenney L. **3**, 95
Dodge, Ruth A. **6**, 58
Dox, A. W. **2**, 13; **4**, 27
Drake, N. L. **3**, 17
Dreger, E. E. **2**, 85; **4**, 1, 45; **5**, 39, 43, 45, 55, 69, 103; **6**, 6, 40, 52, 54
Du Vigneaud, V. **4**, 3
Dyson, G. Malcolm **6**, 18, 86

Edgar, Graham **4**, 15

Fieser, L. F. **4**, 43, 73
Flosdorf, E. W. **5**, 91
Fraser, W. A. **4**, 63
Freeman, S. A. **5**, 79

Gauerke, C. G. **6**, 44
Gortner, R. A. **5**, 39
Granara, R. M. **4**, 13, 37

Gray, A. E. **5**, 91
Griswold, A. M. **6**, 8, 16, 86

Haeseler, P. R. **6**, 28
Hager, F. D. **3**, 45
Hamilton, Frances H. **2**, 89; **3**, 65, 99
Hanaway, W. L. **2**, 37
Hanson, E. R. **4**, 13, 37
Harris, S. A. **6**, 58
Hartman, W. W. **1**, 21; **2**, 17, 41, 53, 61, 93, 95; **3**, 37, 47, 79
Hartung, W. H. **6**, 1
Heaton, J. S. **3**, 41
Heckel, H. C. N. **1**, 45, 53
Heckert, L. C. **5**, 93
Heilbron, I. M. **3**, 41
Helferich, B. **6**, 64
Herzog, H. F. **5**, 55
Hessler, John C. **2**, 67
Hiers, G. S. **5**, 71; **6**, 12, 28, 54, 78
Hill, G. A. **5**, 15, 91
Hinegardner, W. S. **4**, 15
Hixon, R. M. **6**, 92
Hoffman, W. F. **5**, 39
Holleman, A. F. **6**, 82
Howard, J. W. **4**, 63
Hufferd, R. W. **1**, 39; **2**, 41
Hurd, C. D. **4**, 39

Ingersoll, A. W. **5**, 85, 93
Inglis, J. K. H. **6**, 36

Jenkins, R. L. **2**, 5; **3**, 67, 75
Johnson, John R. **5**, 49, 99; **6**, 8, 16
Johnstone, H. F. **5**, 31, 33

Kamm, Oliver **1**, 1, 15, 39, 61; **2**, 5, 9, 13, 27, 29, 33, 53, 63; **3**, 13, 33, 71, 73, 75, 87; **4**, 5, 19, 23, 39, 57, 65
Kamm, R. M. **4**, 11
Kamm, W. F. **2**, 5
Kaufmann, W. E. **5**, 55
Kendall, E. C. **3**, 25, 51, 57
Kendall, F. E. **6**, 36, 68
Kenyon, Joseph **5**, 59; **6**, 68
King, W. B. **3**, 95; **5**, 13
Kinney, A. McB. **1**, 75, 79
Kinney, C. R. **5**, 17
Kirby, J. E. **5**, 23; **6**, 22
Kirner, W. R. **2**, 47
Kohler, E. P. **2**, 1; **3**, 53
Kon, G. A. R. **5**, 9, 37
Kremers, Edward **6**, 92

Langley, W. D. **4**, 47
Lansing, W. D. **5**, 27
Lea, L. F. **3**, 91
Leavitt, R. P. **2**, 1
Lespieau, R. **5**, 49; **6**, 20, 26
Lewis, H. B. **5**, 63
Lewis, W. Lee **3**, 13
Lutz, R. E. **3**, 7

McColm, E. M. **5**, 103
McElvain, S. M. **3**, 33; **4**, 49
McEwen, W. L. **5**, 49, 99
McKenzie, B. **3**, 25, 51, 57

Malm, C. J. **5**, 63
Marloth, W. S. **1**, 61
Matthews, A. O. **2**, 9, 29, 33, 53, 63; **3**, 13, 87
Mauthner, F. **6**, 96
Meyers, C. H. **4**, 59
Morales, M. E. **1**, 35
Murray, T. F. **3**, 41; **4**, 29, 77, 81; **5**, 5, 53

Nieuwland, J. A. **4**, 23
Nissen, B. H. **3**, 1
Noller, C. R. **3**, 79; **5**, 9, 17, 37; **6**, 22, 92
Norris, J. F. **4**, 81; **5**, 27
Norton, A. J. **4**, 65
Noyes, W. A. **2**, 75

Ogden, Katharine **1**, 57, 71
Olander, C. P. **6**, 72
Osterberg, A. E. **5**, 35

Palmer, C. S. **4**, 5
Parker, H. H. **5**, 75
Phillips, Ross **3**, 61; **4**, 15, 53; **5**, 87
Porter, P. K. **2**, 61, 75; **3**, 21
Puterbaugh, Milton **4**, 11

Quayle, O. R. **2**, 13, 29, 33

Rahrs, E. J. **3**, 21
Rassweiler, C. F. **5**, 5
Read, R. R. **4**, 69
Reichert, J. S. **4**, 23
Reynolds, H. H. **6**, 78
Roberts, K. C. **6**, 36
Robertson, G. Ross **2**, 57, 59; **3**, 11; **5**, 23

Sandborn, L. T. **5**, 99; **6**, 8, 16, 52, 72
Schäfer, W. **6**, 64
Schram, Ethel **1**, 35
Schulze, F. **5**, 1, 3; **6**, 12
Segur, J. B. **3**, 71, 73
Semon Waldo L. **3**, 61
Shriner, R. L. **4**, 9, 27, 43, 63, 73
Sloan, A. W. **2**, 79; **3**, 17, 37, 45
Smiles, S. **5**, 1, 3
Sperry, W. M. **3**, 57
Stewart, Jessie **5**, 3

Taylor, E. R. **1**, 15, 49; **3**, 3, 27, 71, 73, 91; **4**, 3, 9, 31, 47; **6**, 48, 66, 100

Thal, A. F. **2**, 9, 27, 63
Thayer, F. K. **4**, 1; **5**, 83; **6**, 12
Thompson, H. R. **2**, 71
Thorpe, J. F. **5**, 9, 37
Thurman, N. **3**, 65, 99
Toohy, J. J. **2**, 93
Tuley, W. F. **4**, 31; **5**, 9, 69
Tuttle, Neal **1**, 45, 53

Vernon, C. C. **5**, 85
Vliet, E. B. **2**, 85; **4**, 35, 45; **5**, 43, 45
Voorhees, V. **1**, 49, 67

Wakeman, Nellie **6**, 92
Wheeler, A. S. **6**, 74
Wheeler, T. S. **6**, 48
Whidden, F. C. **3**, 65, 67, 99
Whitmore, Marion G. **3**, 83
Willson, F. G. **6**, 48
Wilson, W. C. **3**, 87; **6**, 44
Wolfrom, M. L. **6**, 1
Woodward, Gladys E. **6**, 4

Yeaw, J. S. **6**, 58
Yoder, L. **2**, 13

SUBJECT INDEX

(This index comprises material from all volumes of this series.)

(The number in bold-face type that follows each entry refers to a volume of Organic Syntheses; the number in italics refers to the page containing directions for the preparation of the compound, and the number in Arabic refers to the page that mentions the compound in connection with another synthesis. For example, with "Nitrourea, **5**, *85*, 94," directions for its preparation are given in volume 5 on page 85, and its use in the preparation of semicarbazide sulfate is mentioned on page 94 of the same volume.)

A

Absolute alcohol, **4**, 11, 29; **5**, 53, 55, 56, 59. (See also Ethyl alcohol)
Acetal, **3**, *1*
Acetalation, **3**, *1*
Acetaldehyde, **3**, 1, 91, 92; **4**, 53; **6**, 17
Acetamide, **3**, *3*
p-Acetaminobenzene sulfinic acid, **5**, *1*, 3
p-Acetaminobenzene sulfonyl chloride, **5**, 1, *3*
Acetanilide, **4**, 40; **5**, 1, 3
Acetic acid, **2**, 18, 33, 64; **3**, 3, 11, 45; **4**, 5, 47; **6**, 8, 52
Acetic anhydride, **3**, *21*; **4**, *35*; **5**, 17, 83
Acetone, **1**, 45, 47, 53, 54; **2**, 41; **3**, 17, 58, 61; **4**, 39; **5**, 87; **6**, 40
Acetone dicarboxylic acid, **5**, *5*, 53
Acetophenone, **2**, 1; **5**, 19
p-Acetotoluide, **6**, 8
Acetoxime, **3**, *62*
Acetylation, **4**, 1, 35, 40; **6**, 8
Acetyl chloride, **4**, 1
Acetylene, **4**, 23
Acetyl mandelic acid, **4**, 1
Acetyl mandelyl chloride, **4**, *1*
Acid potassium sulfate, **6**, 2
Acrolein, **6**, *1*
Addition, **4**, 23; **5**, 31, 99; **6**, 28
Adipic acid, **5**, *9*, 37
Ajinomoto, **5**, *66*
Alkali fusion, **3**, 37
Alkylation, **4**, 11, 59
Alkyl bromides, **1**, *1*
Alkylene bromides, **1**, 1, 8, 9
Allyl alcohol, **1**, 3, 11, *15*
Allyl bromide, **1**, 1, *3*, 11, 17; **5**, 45, 99
Aluminium chloride, **4**, 73, 81; **5**, 17
α-Amino-*n*-caproic acid, **4**, *3*
1,4-Aminonaphthol hydrochloride, **3**, *7*; **5**, 79
p-Aminophenylacetic acid, **3**, *11*
Aminothymol, **6**, 93
Ammonia, **4**, 19
Ammonium acetate, **3**, 12
Ammonium *p*-aminophenylacetate, **3**, *11*
Ammonium carbonate, **2**, 75; **3**, 3, 4; **4**, 20
Ammonium chloride, **1**, 75, 79, 81; **3**, 67; **4**, 47, 57
Ammonium hydroxide, **2**, 37, 75; **3**, 11; **4**, 3; **6**, 28, 72
Ammonium phenyl dithiocarbamate, **6**, 72
Ammonium sulfide, **3**, 11
iso-Amyl alcohol, **1**, 4, 10
iso-Amyl bromide, **1**, 1, 2, *4*, *10*
Aniline, **2**, 71, 79; **3**, 7, 13; **4**, 40; **5**, 13, 71; **6**, 72
Aniline arsenate, **3**, 13
Aniline hydrochloride, **3**, 95

Anthracene, **3**, 41
Anthranilic acid, **2**, 47
Arsanilic acid, **3**, *13*
Arsenation, **4**, 5
Arsenic acid, **3**, 13, 14; **4**, 65
Arsenious oxide, **4**, 5, 27
Arsenoacetic acid, **4**, *5*
Arsonation, **3**, 13; **4**, 5, 65
Arsonoacetic acid, **4**, *5*
Asbestos stoppers, **5**, 9

B

Barium arsonacetate, **4**, 5
Barium chloride, **4**, 5
Barium hydroxide, **1**, 45, 46; **4**, 66; **5**, 37
Benzalacetone, **3**, *17*
Benzalacetophenone, **2**, *1*
Benzalaniline, **5**, *13*
Benzaldehyde, **1**, 33; **2**, 1, 5; **3**, 17; **5**, 13, 15; **6**, 58
Benzalpinacolone, **5**, *15*
Benzene, **4**, 25, 81; **5**, 87
Benzeneazo-α-naphthol, **3**, 8
Benzenediazonium chloride, **3**, 7
Benzenesulfonyl chloride, **1**, *21*, 71, 72, 81
Benzil, **1**, *25*, 29, 30; **6**, *6*
Benzilic acid, **1**, *29;* **3**, 45
Benzoic acid, **1**, 30; **2**, 5; **3**, 21; **5**, 77
Benzoic anhydride, **3**, *21*
Benzoin, **1**, 25, 26, *33;* **6**, 6
Benzoquinone, **2**, *85;* **4**, 35
Benzoyl acetate, **3**, 22
Benzyl alcohol, **2**, 5
Benzyl benzoate, **2**, *5*
Benzyl chloride, **2**, 9; **4**, 59
Benzyl cyanide, **2**, *9*, 27, 57, 63
Benzylmagnesium chloride, **4**, 59; **6**, 21
Binder, calcium chloride solution, **5**, 81
Borax, **4**, 46
Boric acid, **6**, 78
Bromination, **1**, 35, 39; **3**, 41; **4**, 9; **6**, 8
Bromine, **1**, 2, 3, 35, 39; **3**, 41; **4**, 9; **5**, 99; **6**, 8
Bromine in glycerol, **4**, 14, 38
3-Bromo-4-acetaminotoluene, **6**, *9*
p-Bromoacetophenone, **5**, *17*
3-Bromo-4-aminotoluene, **6**, *8*, 16
Bromobenzene, **5**, 17, 77; **6**, 32
α-Bromo-*n*-caproic acid, **4**, 3, *9*
2-Bromodecene-1, **6**, 21, 27
2-Bromoethanol, **6**, *12*
α-Bromonaphthalene, **1**, *35*
o-Bromophenol, **1**, 40, 41
p-Bromophenol, **1**, *39*
β-Bromopropionic acid, **3**, *25*, 51
Bromostyrene, **2**, *67*
m-Bromotoluene, **6**, *16*
p-Bromotoluene, **5**, *21*
Brucine, **6**, 69
n-Butyl alcohol, **1**, 5, 6; **3**, 69; **5**, 23, 27
sec.-Butyl alcohol, **5**, 76
n-Butyl bromide, **1**, 2, *5*, 10; **4**, 11; **5**, 77; **6**, 54
sec.-Butyl bromide, **5**, 75
n-Butyl *n*-butyrate, **5**, *23*
n-Butyl chloride, **5**, *27*
sec.-Butyl chloride, **5**, 28
n-Butyl malonic ester (ethyl), **4**, *11*
n-Butyl nitrite, **4**, 19, 20

C

Calcium carbide, **4**, 25
Calcium chloride, **3**, 1, 34, 84, 92
Calcium cyanamide, **5**, 45
Calcium meso-tartrate, **6**, 83
Calcium oxide, **4**, 53
Calomel, **3**, 100
Cannizzaro reaction, **6**, 44, 47
n-Caproic acid, **4**, 9
Capryl alcohol. (See Methyl hexyl carbinol)
Carbanilide, **3**, 95
Carbon dioxide, **5**, 75
Carbon disulfide, **1**, 39, 41; **5**, 17; **6**, 72, 86
Carbon tetrachloride, **1**, 17, 67, 70; **2**, 23; **3**, 25, 41, 51, 76; **4**, 29, 81; **5**, 99
Castor oil, **1**, 61, 63, 65
Catechol, **3**, 27, *28*
Chloral hydrate, **5**, 71
Chlorination, **6**, 86
Chlorine, **2**, *37;* **5**, *31;* **6**, *86*

Chloroacetic acid, **3**, 53, 83; **4**, 5
p-Chloroacetophenone, **5**, 19
p-Chloroaniline, **6**, 18
Chlorobenzene, **1**, *21*; **5**, 19
o-Chlorocyclohexanol, **5**, *31*, 35
Chloroform, **1**, 81; **3**, 68; **4**, 37; **5**, 55
o-Chloromercuriphenol, **4**, *13*
p-Chloromercuriphenol, **4**, 13, 37
2-Chloropentane, **5**, 28
p-Chlorophenol, **6**, 78
p-Chlorophenyl isothiocyanate, **6**, *18*
Chlorosulfonic acid, **5**, 3
o-Chlorotoluene, **3**, *33*
p-Chlorotoluene, **3**, *34*
Citric acid, **5**, 5
Condensation, **1**, 33, 45; **2**, 1, 5, 41, 79; **3**, 17; **4**, 15, 23, 29, 43, 45, 53, 73, 81; **5**, 15, 37, 71, 83; **6**, 36, 40, 78, *83*
Congo Red, **3**, 15, 61; **5**, 39, 40, 72
Copper bronze, **6**, 16
Copper sulfate, **2**, 38; **3**, 33, *79*; **5**, *21*; **6**, 6
Copper turnings, **5**, 21
Cork-pine wood for diaphragms in electrolytic reductions, **5**, 95
Corn cobs, **1**, 49, 51
Coupling reaction, **2**, 47; **3**, 7
Creatine, **4**, 15
Creatinine, **4**, *15*
Creatinine picrate, **4**, 16
Creatinine zinc chloride, **4**, 15
p-Cresol, **3**, *37*
Cupferron, **4**, *19*
Cuprous bromide, **5**, 21
Cuprous chloride, **3**, 33, 34, 79; **4**, 69
Cuprous cyanide, **4**, 69
Cuprous oxide, **6**, 7
Cyclohexanol, **5**, 9, 33
Cyclohexene, **5**, *31*, *33*
Cyclohexene oxide, **5**, *35*
Cyclohexyl bromide, **5**, 77; **6**, 20, 22
3-Cyclohexyl-2-bromopropene-1, **6**, *20*
Cyclohexylbromopropene, **6**, 26
Cyclohexylcarbinol, **6**, *22*
Cyclohexyl chloride, **6**, 24
Cyclohexylmagnesium bromide, **6**, 20
Cyclohexylmagnesium chloride, **6**, 24
3-Cyclohexylpropine-1, **6**, *26*
Cyclopentanone, **5**, *37*
l-Cystine, **5**, *39*

D

Decarboxylation, **2**, 93; **3**, 83; **4**, 63, 77; **5**, 5, 37
Decine-1, **6**, 27
Dehydration, **1**, 53, 67; **2**, 41; **3**, 3, 21; **4**, 15, 43, 63; **5**, 5, 33; **6**, 1
Demethylation, **3**, 28
Diacetonamine hydrogen oxalate, **6**, *28*
Diacetone alcohol, **1**, *45*, 53, 54
Diagrams:
Acetylene condensation, **4**, 24
Automatic extractor, **3**, 88
Automatic separation, **1**, 64, 68; **2**, 23; **3**, 29
Concentration of liquids, **4**, 54
Condensing coil for ethylene oxide, **6**, 13
Condensation of low-boiling liquids, **1**, 76
Dehydration with solvent, **2**, 23
Distillation flask and column, **1**, 40
Distillation of acrolein, **6**, 1
Distillation of thiophosgene, **6**, 89
Electrolytic reduction, **5**, 94
Esterification of non-volatile acid, **5**, 60
Evaporation under reduced pressure, **4**, 54
Extraction and crystallization, **2**, 49; **3**, 88
Extraction of solids, **6**, 101
Hopper, **3**, 87
Manipulation of gases, **4**, 24
Mechanical stirrer, **1**, 4, 12; **3**, 29
Mercury seal, **1**, 4
Pyrogenic decomposition, **4**, 40
Rapid evaporation, **4**, 54
Steam distillations, **1**, 50; **2**, 80
of thicarbonyl perchloride, **6**, 87
with superheated steam under reduced pressure, **5**, 80
Stirring devices with reflux, **1**, 12
Diallyl amine, **5**, *43*
Diallyl cyanamide, **5**, 43, *45*

Diazotization, **2**, 47, 71, 80; **3**, 7, 9, 33, 79, 87, 89, 91; **4**, 69, **5**, 21; **6**, 16
Dibenzalacetone, **3**, 18
Dibenzyl ether, **2**, 6
9,10-Dibromoanthracene, **3**, *41*
1,4-Dibromonaphthalene, **1**, 35, 36
2,4-Dibromophenol, **1**, 40
2,3-Dibromopropene, **5**, *49;* **6**, 20, 21
Di-*n*-butyl amine, **5**, 44
Di-*n*-butyl cyanamide, **5**, 44, 46
α,γ-Dichloroacetone, **2**, *13*
Dichlorohydrin, **2**, 13
Diethyl malonate, **4**, 11, 27, 29
Dihydroxymethylbenzopyrone. (See β-methyl esculetin)
Dimethylamine hydrochloride, **1**, 81; **3**, 68
p-Dimethylaminobenzaldehyde, **2**, *17*
Dimethylaniline, **2**, 17, 47
Diphenylacetic acid, **3**, *45*
α,α-Diphenylethylene, **6**, *32*
Diphenylurea, **3**, 95
Disodium phosphate, **4**, 50
Di-*p*-tolylethane (unsym.), **4**, *23*
Dynamite glycerine, **6**, 4

E

Epichlorohydrin, **3**, *47*
Esterification, **2**, 23, 27; **3**, 27, 51, 53; **5**, 23, 53, 59
Ether (see Ethyl ether)
Ethyl acetate, **3**, 96; **6**, 32, 36
Ethyl acetoacetate, **4**, 45; **6**, *36*
Ethyl acetone dicarboxylate, **5**, *53*
Ethyl acetopyruvate, **6**, *40*
Ethyl adipate, **5**, 11
Ethyl alcohol, **1**, 6; **2**, 23, 27; **3**, 1, 51, 54, 68, 69, 91; **4**, 11, 29; **5**, 15, 45, 53, 55, 59, 103
Ethylation, **4**, 59
Ethyl benzene, **4**, 25
Ethyl bromide, **1**, 1, *6*
Ethyl β-bromopropionate, **3**, *51*
Ethyl cyanoacetate, **3**, *53*
Ethylene bromohydrin, **6**, *12*
Ethylene chlorohydrin, **3**, 57
Ethylene cyanohydrin, **3**, 25, *57*
Ethylene oxide, **6**, 12, 54
Ethyl ether, **3**, 47, 48; **4**, 59, 81; **5**, 75
Ethyl fumarate, **4**, 29
Ethyl glutarate, **5**, 11
Ethyl hydracrylate, **3**, 52
Ethyl malonate, **4**, 11, 27, 29
Ethyl mesoxalate, **4**, *27*
Ethyl *m*-nitrobenzoate, **3**, 72
Ethyl orthoformate, **5**, *55*
Ethyl oxalate, **2**, *23;* **5**, *59;* **6**, 40
Ethyl oxomalonate, **4**, *27*
Ethyl phenylacetate, **2**, *27*
Ethyl propane-1,1,2,3-tetracarboxylate, **4**, *29*, 77
Ethyl succinate, **5**, 10
Ethyl sulfate, **4**, 60
Extraction, **2**, 49; **3**, 88
Extraction of nutmegs, **6**, 100

F

Fehling's solution, **1**, 26
Ferrous sulfate, **2**, 79
Ferrous sulfide, **3**, 12
Filtros plate, **2**, 43; cementing, **4**, 43; for filtering, **5**, 7, 65, 95; as diaphragms in electrolytic reduction, **5**, 95
Flour, **5**, 63
Flour, gluten, **5**, 65
Formaldehyde, **2**, 17; **3**, 67; **4**, 47, 53; **6**, 23
Formalin. (See Formaldehyde.)
Formic acid, **1**, 15, 18
Fractionating column, **3**, *21*
Friedel and Craft's reaction, **4**, 73, 81; **5**, 17
2-Furancarboxylic acid, **6**, *44*
Furfural, **1**, *49;* **6**, 44
Furfuryl alcohol, **6**, *44*
Furoic acid, **6**, *44*
2-Furylcarbinol, **6**, *44*

G

Gallic acid, **6**, 96
Gelatine, **2**, *37*
Glidine, **5**, 66
d-Glucose, **6**, 64
d-Glutamic acid, **5**, *63*
Glutaric acid, **5**, 10, *69*

Gluten, **5**, 63
Glycerol, **1**, 15, 17; **2**, 29, 33, 79; **6**, 2
Glycerol-α,γ-dichlorohydrin, **2**, *29;* **3**, 47
Glycerol-α-monochlorohydrin, **2**, *33;* **6**, 48
α-Glyceryl phenyl ether, **6**, *48*
Glycine, **4**, *31*
Grignard reaction, **4**, 59; **5**, 75; **6**, 20, 22, 32, 54
Guaiacol, **3**, 28

H

Hair, human, **5**, 39
Halogenation. (See **Bromination**, etc.)
Heptaldehyde, **6**, 52
n-Heptyl alcohol, **6**, *52*
Heptylmagnesium bromide, **6**, 21
Hexahydrobenzoic acid, **5**, 77
n-Hexyl alcohol, **6**, *54*
Hopper, **3**, 47, 87
Hydrazine hydrate, **6**, 74
Hydrazine sulfate, **2**, *37*
Hydriodic acid, **3**, 45
Hydrobromic acid, **1**, 1, *2*, *4*, 36, 39; **3**, 25, 28, 43; **4**, 31; **6**, 12
Hydrochloride of aminothymol, **6**, 94
Hydrochloride of 3-bromo-4-aminotoluene, **6**, 9
α-Hydroformamine cyanide, **4**, 47. (See Methylene aminoacetonitrile.)
Hydrogen chloride generator, **2**, 30
Hydrogen peroxide, **3**, 27
Hydrogen sulfide, **3**, 11; **6**, 93
Hydrolysis, **1**, 49; **2**, 27, 59, 63; **3**, 25, 28, 53, 61, 73; **4**, 31, 77; **5**, 39, 43, 63, 69; **6**, 58, 66
Hydroquinone, **2**, 85; **6**, 2
Hydroxyhydroquinone triacetate, **4**, *35*, 45
Hydroxylamine hydrochloride, **3**, *61;* **5**, 71
Hydroxylamine sulfate, **5**, 73
Hypochlorous acid, **5**, 31

I

Imide formation, **2**, 75
Iodination, **4**, 37
Iodine, **1**, 53, 54; **3**, 45; **4**, 37
Iodoform, **1**, 57, 58
o-Iodophenol, **4**, *37*
Iron filings, **6**, 52
Isatin, **5**, *71*
Isonitrosoacetanilide, **5**, 71
Isonitroso-*p*-toluidide, **5**, 74
Isothiocyanates, alkyl, **6**, 19; **aryl**, **6**, 73

K

Keratin, **5**, 39
Ketene, **4**, *39*

L

Lauryl alcohol, **1**, 7
Lauryl bromide, **1**, *7*
Lead nitrate, **6**, 72
Lime nitrogen, **5**, 45, 46

M

Magnesium, **4**, 59; **5**, 75, 87; **6**, 20, 22, 32, 54
Malonic ester synthesis, **4**, 11, 29
Mandelic acid, **4**, 1; **6**, *58*
Mandelonitrile, **6**, 58
Melanin, **5**, 63
Mercuration, **3**, 65, 99; **4**, 13
Mercuri-bis compounds, preparation of, **3**, 65
Mercuric acetate, **4**, 13
Mercuric chloride, **3**, 99; **5**, 31, 87
Mercuric iodide, **4**, 37
Mercuric sulfate, **4**, 23
Mercurous chloride, **3**, 100
Mercury di-*p*-tolyl, **3**, *65*
Mesitylene, **2**, *41;* **4**, 25
Mesityl oxide, **1**, *53;* **6**, 28
Meso-tartaric acid, **6**, *82*
p-Methoxyacetophenone, **5**, 19
p-Methylacetophenone, **5**, 19
Methylal, **3**, 67, 69
Methyl alcohol, **3**, 29, 71; **4**, 3, 15, 31; **6**, 64
Methylamine hydrochloride, **1**, 81; **3**, *67*
β-Methyl anthraquinone, **4**, *43*

Methylation, **6**, 96
by means of formaldehyde, **1**, *75*, *79*; **2**, 17; **3**, 67
Methyl benzoate, **3**, 71, 72
Methyl bromide, **3**, 29
Methyl cyanoacetate, **3**, 56
Methylene aminoacetonitrile, **4**, 31, *47*
Methylene iodide, **1**, *57*
β-Methyl esculetin, **4**, *45*
dl-Methyl ethyl acetic acid, **5**, *75*
Methyl formate, **3**, 67
α-Methyl-*d*-glucoside, **6**, *64*
β-Methyl glucoside, **6**, 65
Methyl hexyl carbinol, **1**, *61*
Methyl iodide, **1**, 57, 59
5-Methyl isatin, **5**, 74
Methyl *m*-nitrobenzoate, **3**, *71*, 73
Methyl *o*-nitrobenzoate, **3**, 72
Methyl oxalate, **5**, 60
Methyl Red, **2**, *47*
Methyl sulfate, **6**, 96
Mineral oil, **6**, 26
Monosodium glutamate, **5**, 66
Myristic acid, **6**, *66*

N

Naphthalene, **1**, 35, 36
α-Naphthol, **3**, 7, 9
β-Naphthol, **2**, 61
1, 4-Naphthoquinone, **5**, *79*
Nicotine, **4**, 49
Nicotinic acid, **4**, *49*
Nicotinic acid nitrate, **4**, 49
Nicotinic acid hydrochloride, **4**, 51
Nitration, **2**, 57; **3**, 71; **5**, 85
Nitric acid, **1**, 25, 26; **2**, 57; **3**, 71; **4**, 27, 49; **5**, 9
3-Nitro-4-aminotoluene, **3**, 91
m-Nitroaniline, **3**, 79, 87
m-Nitrobenzaldehyde, **5**, 83
Nitrobenzene, **2**, 79; **4**, 19, 57
m-Nitrobenzoic acid, **3**, *73*
p-Nitrobenzoic acid, **2**, *53*; **3**, 75, 76
p-Nitrobenzoyl chloride, **3**, *75*
p-Nitrobenzyl cyanide, **2**, *57*, 59
m-Nitrochlorobenzene, **3**, *79*
m-Nitrocinnamic acid, **5**, *83*
Nitromethane, **3**, *83*
m-Nitrophenol, **3**, *87*
p-Nitrophenylacetic acid, **2**, *59*; **3**, 11
Nitrosation, **2**, 17, 61; **4**, 19; **6**, 92
p-Nitrosodimethylaniline hydrochloride, **2**, 17
Nitroso-*β*-naphthol, **2**, *61*
Nitroso-*β*-phenyl hydroxylamine, **4**, 21
Nitrosothymol, **6**, *92*
m-Nitrotoluene, **3**, *91*
p-Nitrotoluene, **2**, 53
m-Nitro-*p*-toluidine, **3**, 91
Nitrourea, **5**, *85*, 94
Nitrous anhydride, **4**, 27
Nutmeg butter, **6**, 101
Nutmegs, **6**, 100

O

d- and *l*-Octanol-2, **6**, *68*
n-Octyl alcohol, **1**, 7
sec.-Octyl alcohol, **6**, 68
n-Octyl bromide, **1**, *7*
sec.-Octyl hydrogen phthalate, **6**, 68
Optically active *sec.*-octyl alcohols, **6**, *68*
Oxalic acid, **1**, 17, 18; **2**, 23; **5**, 59, 92; **6**, 28
Oxalic acid, anhydrous, **1**, 18, *67*; **5**, 59
Oxidation, **1**, 25; **2**, 13, 37, 39, 53, 79, 85, 95; **3**, 27; **4**, 27, 49; **5**, 9, 23, 79; **6**, 6, 92

P

Paraformaldehyde, **1**, 75, 79, 81; **6**, 22
Pentaerythritol, **4**, *53*
Perkin's reaction, **5**, 83
Phenol, **1**, 39; **2**, 39; **4**, 13, 65; **6**, 48
Phenol burns, **4**, 14, 38
Phenolphthalein, **3**, 83; **5**, 77
Phenolsulfonic acid, **3**, 51
Phenylacetic acid, **2**, 10, *63*
Phenylacetylene, **2**, *67*
4-Phenyl-2-bromobutene-1, **6**, 21, 27
4-Phenylbutine-1, **6**, 27
Phenylhydrazine, **2**, *71*
β-Phenyl hydroxylamine, **4**, 19, *57*
Phenyl isothiocyanate, **6**, *72*
Phenylmagnesium bromide, **6**, 32
4-Phenylsemicarbazide, **6**, *74*

Phenylurea, **3**, *95;* **6**, 74
Phosphoric acid, **3**, 21; **5**, 92
Phosphorus, **3**, 45
Phosphorus oxychloride, **1**, 22; **3**, 75
Phosphorus pentrachloride, **1**, 21, 22; **3**, 75, 76
Phosphorus trichloride, **4**, 9
Phthalic anhydride, **2**, 75; **4**, 43, 73; **6**, 68, 78
Phthalimide, **2**, *75*
Picric acid, **4**, 16
Pinacol hydrate, **5**, *87*, 91
Pinacoline, **5**, *91*
Pinacolone, **5**, 15, *91*
Pinacolone, rearrangement, **5**, 91
Potassium acid sulfate, **4**, 63
Potassium benzilate, **1**, *29*, *30*
Potassium hydroxide, **1**, 29; **2**, 67; **3**, 37
Potassium iodide, **4**, 37
Potassium sulfate, **6**, 2
n-Propylbenzene, **4**, *59*
iso-Propyl chloride, **5**, 28
n-Propyl chloride, **5**, 28
Propylene bromide, **1**, 3, 11
Pyridine, **4**, 31; **6**, 6
Pyrogenic decomposition, **1**, 61; **4**, 39
Pyromucic acid, **6**, *44*
Pyruvic acid, **4**, *63*

Q

Quinizarin, **6**, *78*
Quinoline, **2**, *79*
Quinone, **2**, *85*

R

Racemization, **6**, 82
Rearrangement, **1**, 29; **5**, 91
Reduction, **1**, 57, 71; **2**, 71, 89; **3**, 7, 11, 45, 61; **4**, 5, 57; **5**, 87, 93; **6**, 52, 86, 92
electrolytic, **5**, 93
of sulfonyl chloride, **5**, 1
Resolution of racemates, **6**, 68

S

Salicylaldehyde, **3**, 27
Salting out, **4**, 57
Saponification, **3**, 73; **6**, 66
Sealing filter plates, **5**, 7
Semicarbazide sulfate, **5**, *93*
Separator, automatic, **1**, 64, 68; **2**, 23
Silica for sealing, **5**, 7
Skraup synthesis, **2**, 79
Soap, **5**, 39
Sodamide, **6**, 26
Sodium, **6**, 36
Sodium acetate, **2**, 48; **5**, *39*, 40, 83
Sodium alcoholate, **4**, 11, 29
Sodium arsenite, **1**, 57, 58; **4**, 5
Sodium arsonoacetate, **4**, 6
Sodium benzenesulfonate, **1**, 21, 22
Sodium benzylate, **2**, 6
Sodium bisulfite, **1**, 62, 63; **3**, 33, 45, 61, 79; **5**, 79; **6**, 58
Sodium bromide, **1**, 2, *6*, 8, *10*; **5**, *21*
Sodium chloride, **4**, 13
Sodium cyanamide, **5**, 45
Sodium cyanide, **1**, 33; **2**, 9; **3**, 53, 57; **4**, 47, 69; **5**, 103; **6**, 58
Sodium dichromate, **2**, 13, 53, 85, 95; **5**, 23, 79
Sodium ethyl acetopyruvate, **6**, 40
Sodium ethylate, **6**, 40, 48
Sodium formate, **3**, 69
Sodium 2-furancarboxylate, **6**, 44
Sodium hydrosulfite, **3**, 8, 10
Sodium *p*-hydroxyphenylarsonate, **4**, *65*
Sodium hypochlorite, **2**, 37
Sodium hypophosphite, **4**, 6
Sodium iodide, **3**, 65
Sodium metallic, **2**, 5, 42; **4**, 11, 29; **5**, 55
Sodium nitrite, **2**, 17, 47, 61, 71, 80; **3**, 7, 33, 61, 79, 83, 87, 91; **4**, 69; **5**, 21; **6**, 16, 92
Sodium phenate, **6**, 48
Sodium silicate, **6**, 3
Sodium sulfate, **4**, 6; **5**, 71
Sodium sulfite, **2**, 71; **3**, 33; **5**, 1
Sodium *p*-toluenesulfinate, **2**, *89;* **3**, 99
Sodium *p*-toluenesulfonate, **3**, 37, 38
Starch iodide paper, **3**, 7, 79
Steam distillation apparatus, **2**, 80
Steam distillation, reduced pressure, **5**, 80

Stirrer, **1**, 4
Stopper protection, tin foil for rubber, **4**, 68
Stoppers, asbestos and water glass, **5**, 9
Sublimation under reduced pressure, **5**, 80
Succinic acid, **5**, 10
Sulfonation, with chlorosulfonic acid, **5**, 3
Sulfosalicylic acid, **3**, 51
Sulfur dioxide, **2**, 71; **3**, 9, 61
Sulfuric acid, fuming, **4**, 43; **5**, 5
Superheated steam distillation, **5**, 80

T

Tartaric acid, **1**, 46; **4**, 63
d-Tartaric acid, **6**, 82
dl-Tartaric acid, **6**, *82*
Tetrabromophenolsulfonphthalein, **3**, 14
Tetrahydroxymethylmethane, **4**, 53. (See Pentaerythrytol.)
Thiocarbonyl perchloride, **6**, 86
Thionyl chloride, **4**, 1
Thiophenol, **1**, *71*
Thiophosgene, **6**, 18, *86*
Thymoquinone, **6**, *92*
Thymol, **6**, 92
Tin, **6**, 88
Toluene, **2**, 48; **3**, 27, 30, 42; **4**, 23, 73
p-Toluenesulfonyl chloride, **2**, 89
o-Toluidine, **3**, 33; **4**, 69
p-Toluidine, **3**, 34; **4**, 70; **5**, 21, 74; **6**, 8
o-Tolunitrile, **4**, *69*
p-Tolunitrile, **4**, *69*
p-Toluyl-*o*-benzoic acid, **4**, 43, *73*
p-Tolylmercuric chloride, **3**, 65, 85, *99*
1,2,3-Tribromopropane, **5**, 49, *99*
Tricarballylic acid, **4**, *77*
Trimethylamine, **1**, *75*
Trimethylamine hydrochloride, **1**, 75, *79*
Trimethylene bromide, **1**, 2, *8*, 10, 11; **5**, 103
Trimethylene bromohydrin, **1**, 11
Trimethylene cyanide, **5**, 69, *103*
Trimethylene glycol, **1**, 8
Trimethylgallic acid, **6**, *96*
Trimyristin, **6**, 66, *100*
1,3,5-Trinitrobenzene, **2**, *93*, 96
2,4,6-Trinitrobenzoic acid, **2**, 93, *95*
2,4,6-Trinitrotoluene, **2**, 93, 95
Triphenylchloromethane, **4**, 83
Triphenylmethane, **4**, *81*
Tyrosine, **5**, 41

U

Urea, **3**, 95
Urea nitrate, **5**, 85

V

n-Valeric acid, **5**, 77
Viscolizer, **2**, 38

W

Water glass, for sealing, **5**, 7
Williamson reaction, **6**, 48
Wool, **5**, 40

X

Xylene, **3**, 65, 99; **4**, 25

Z

Zeolite for removing ammonia, **4**, **32**
Zinc chloride, **4**, 15; **5**, 27
Zinc dust, **1**, 71, 72; **2**, 89; **4**, 57

1662
13 JAN 1923
LIBRARY